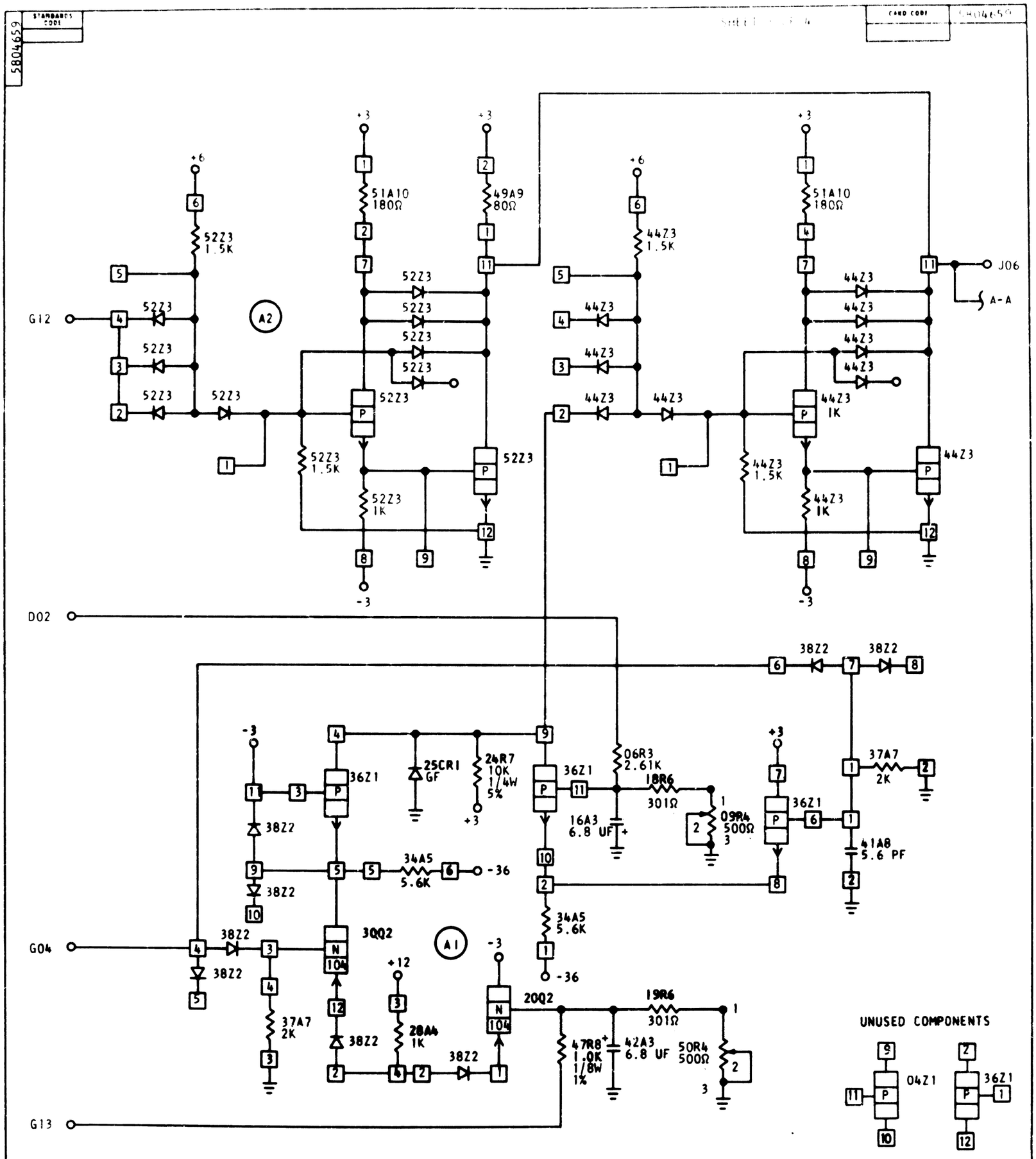
5804659
STANDARDS CODE
CARD CODE
+6
52Z3
1.5K
G12
52Z3
A2
+3
51A10
180Ω
49A9
80Ω
52Z3
52Z3
1K
-3
44Z3
1.5K
44Z3
44Z3
1K
J06
A-A
D02
38Z2
-3
36Z1
25CR1
GF
24R7
10K
1/4W
5%
+3
06R3
2.61K
18R6
301Ω
16A3
6.8 UF
09R4
500Ω
37A7
2K
41A8
5.6 PF
34A5
5.6K
-36
G04
3QQ2
A1
+12
28A4
1K
20Q2
19R6
301Ω
47R8
1.0K
1/8W
1%
42A3
6.8 UF
50R4
500Ω
UNUSED COMPONENTS
04Z1
36Z1
G13
+3
08A2
.68UF
-3
13A2
.68UF
-36
B2
17A2
.68UF
+12
29A2
.68UF
+6
B1
10A3
6.8
UF
GND -- D08, J08 BUSSED
CIRCUIT AND PACKAGING STANDARD
APPROVAL
DATE
INTERNATIONAL BUSINESS MACHINES CORP.
DATA SEPARATOR
DESIGN
DETAIL AS 10-9-4
CHECK TH 10-13-4
APPRO
MODEL
SCALE NONE
DRAW AMS 10-9-4
CHECK TH 10-13-4
DATE
CHANGE NO.
APPROVAL
161876
29JUL65 165176B
6NOV67 171559 C
DEVELOPMENT NO.
SS480
5804659
C