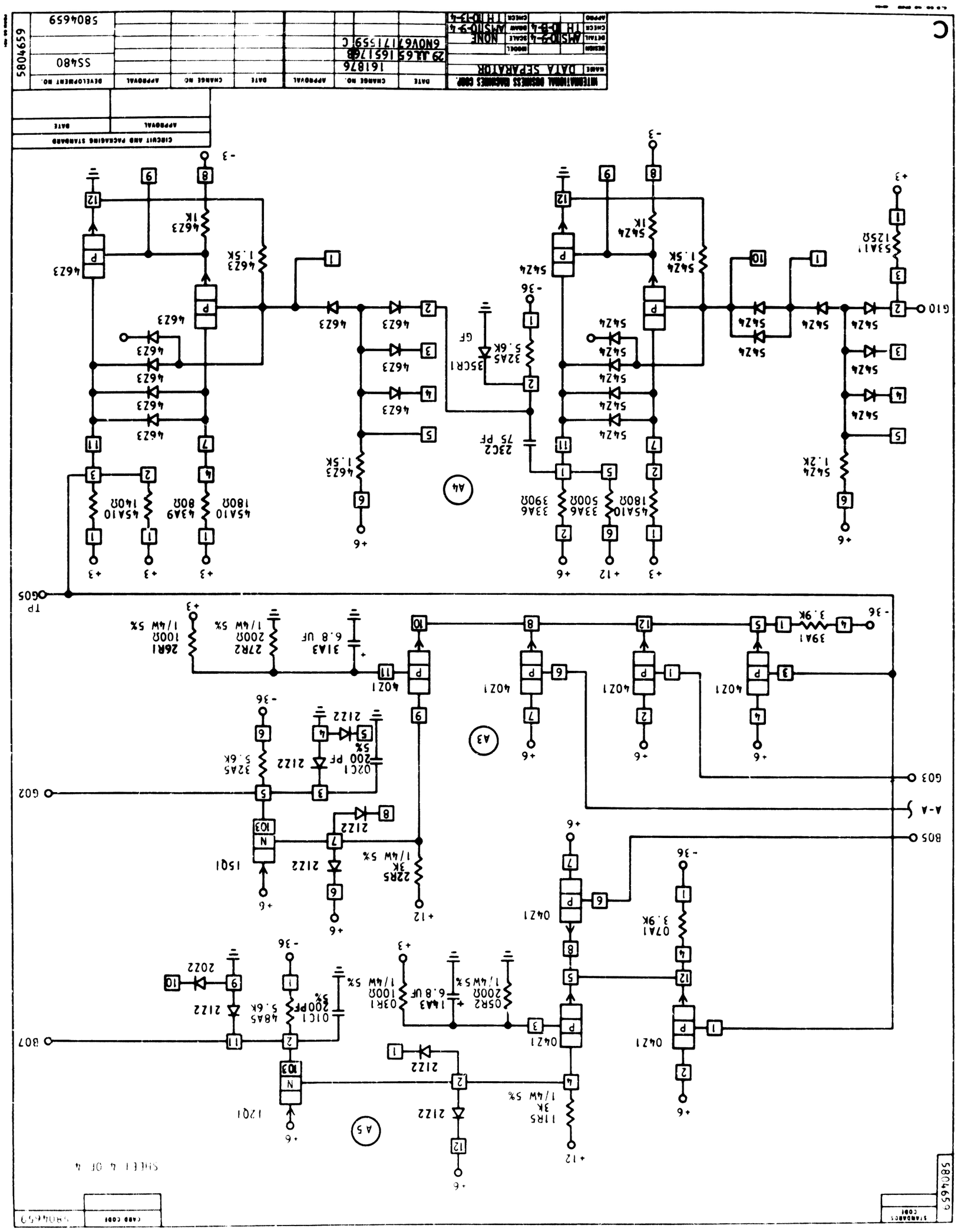
INTERNATIONAL BUSINESS MACHINES CORP.
NAME DATA SEPARATOR
DESIGN
DETAIL AM5100-4
CHECK TH 10-8-4
APPRO
MODEL
SCALE NONE
DRAWN AM5100-9-4
CHECK TH 10-13-4
DATE
CHANGE NO. 161876
APPROVAL
DATE 29 JUL 65
CHANGE NO. 165176B
APPROVAL
DATE 6NOV67
CHANGE NO. 171559C
5804659
DEVELOPMENT NO. SS480
APPROVAL
CHANGE NO.
DATE
APPROVAL
CIRCUIT AND PACKAGING STANDARD
DATE
C
A4
A3
A5
A-A
G10
G05
G03
G02
B05
B07
TP
4A10 180Ω
4A9 80Ω
4A10 140Ω
4A6Z3 1.5K
4A6Z3 1K
4A6Z3
23C2 75 PF
32AS 5.6K
35CR1 GF
5A6Z4
5A6Z4 1.5K
5A6Z4 1K
5A6Z4 1.2K
53A1 125Ω
4A10 180Ω
33A6 500Ω
33A6 390Ω
4A6Z3 1.5K
4A6Z3 1K
4A6Z3 1.5K
4A6Z3
4A6Z3
4A6Z3