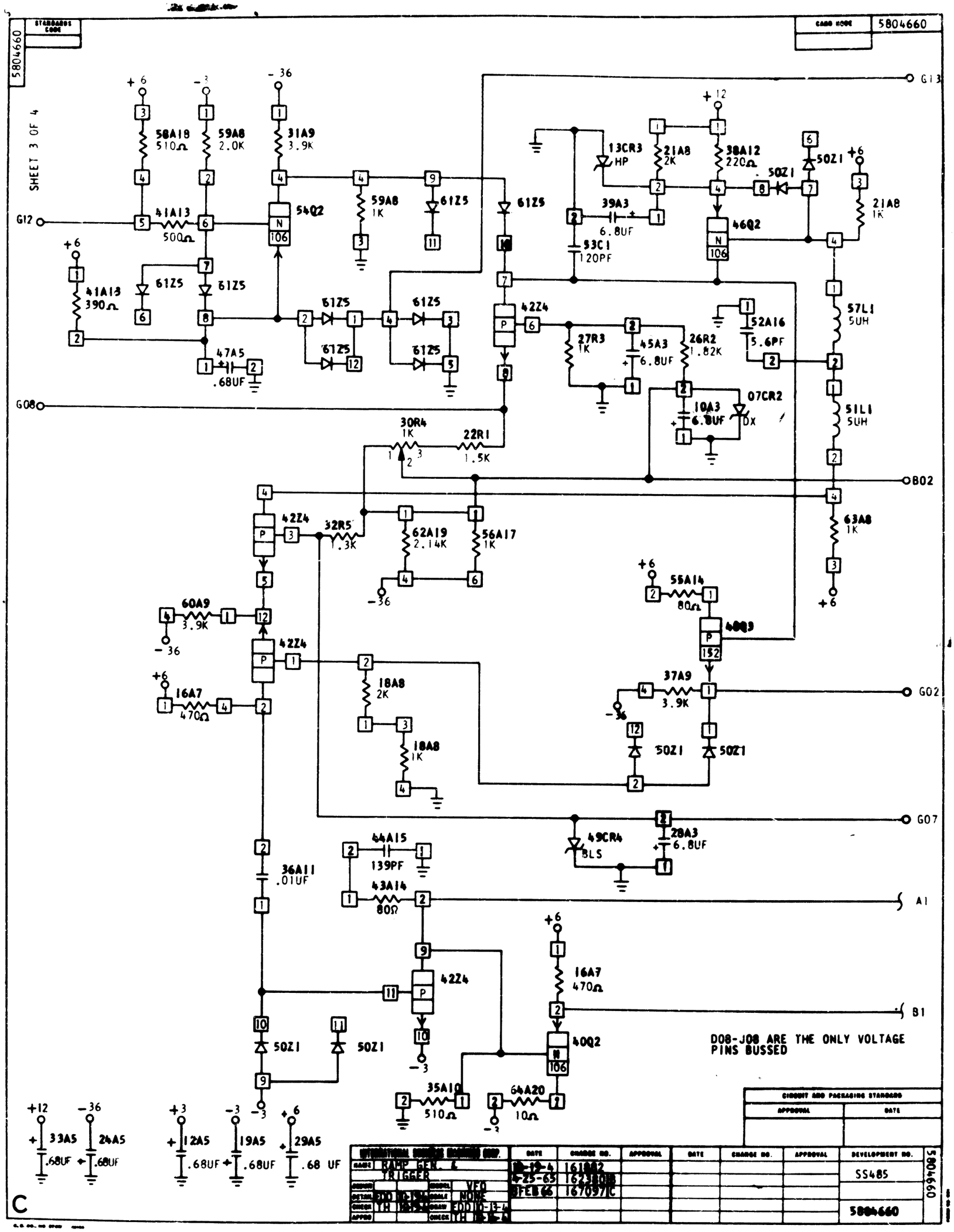
5804660
SHEET 3 OF 4
G12
G13
G08
B02
G02
G07
A1
B1
58A18 510Ω
59A8 2.0K
31A9 3.9K
41A13 500Ω
54Q2
59A8 1K
61Z5
41A13 390Ω
47A5 .68UF
42Z4
27R3 1K
45A3 6.8UF
26R2 1.82K
52A16 5.6PF
13CR3 HP
21A8 2K
38A12 220Ω
50Z1
39A3 6.8UF
53C1 120PF
46Q2
21A8 1K
57L1 5UH
51L1 5UH
10A3 6.8UF
07CR2 DX
30R4 1K
22R1 1.5K
32R5 1.3K
62A19 2.14K
56A17 1K
63A8 1K
60A9 3.9K
16A7 470Ω
18A8 2K
18A8 1K
55A14 80Ω
40Q3
37A9 3.9K
28A3 6.8UF
49CR4 BLS
44A15 139PF
43A14 80Ω
36A11 .01UF
40Q2
35A10 510Ω
64A20 10Ω
DO8-J08 ARE THE ONLY VOLTAGE PINS BUSSED
33A5 .68UF
24A5 .68UF
12A5 .68UF
19A5 .68UF
29A5 .68 UF
RAMP GEN. & TRIGGER
VFO
NONE
SS485
5804660