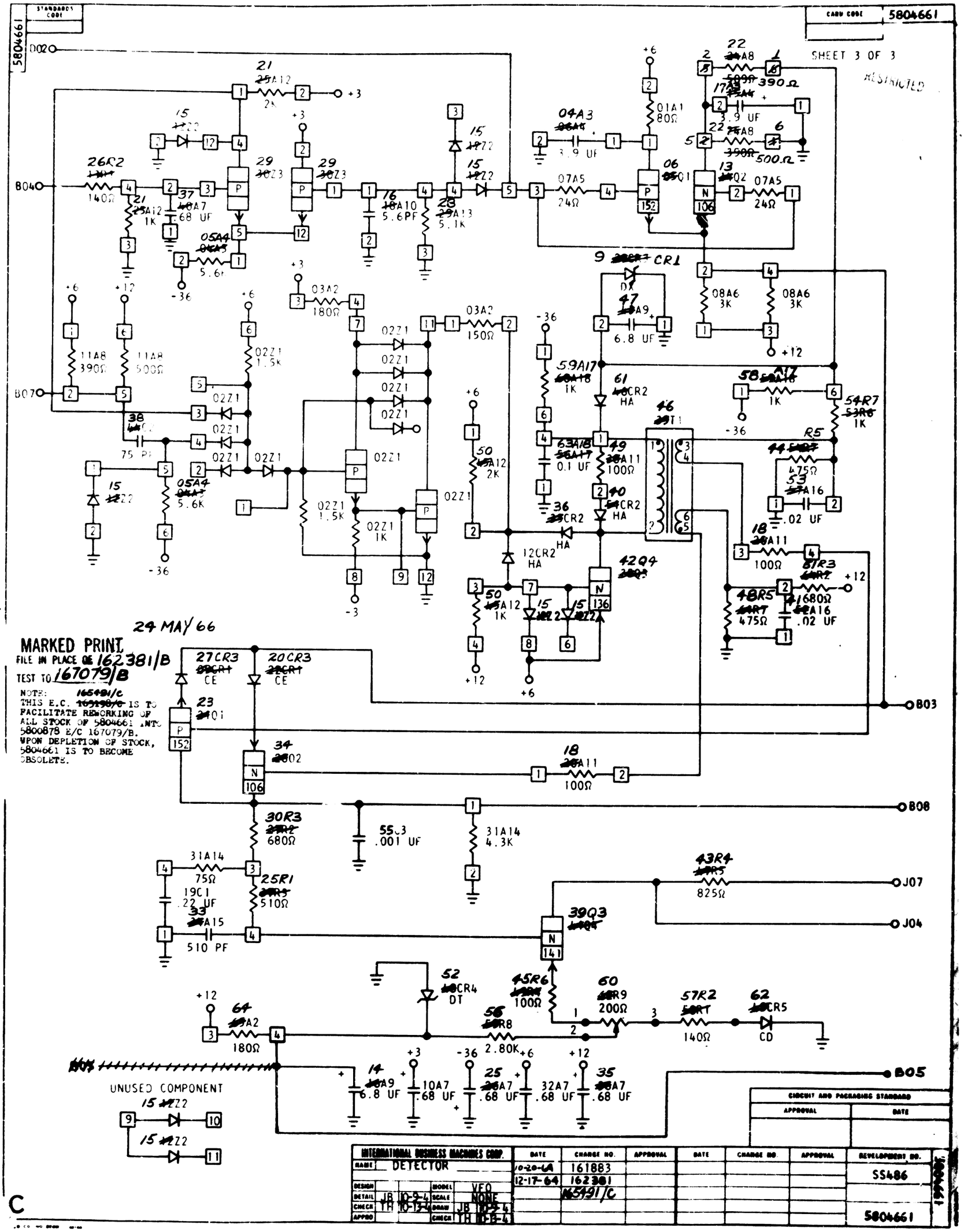
5804661
STANDARDS CODE
CARD CODE
SHEET 3 OF 3
RESTRICTED
D02
B04
B07
B03
B08
J07
J04
B05
26R2 140Ω
21 25A12 1K
37 40A7 68 UF
05A4 5.6K
21 25A12 2K
29 30Z3
16 18A10 5.6PF
28 29A13 5.1K
15 17Z2
04A3 3.9 UF
07A5 24Ω
06 25Q1
01A1 80Ω
22 24A8 390Ω
3.9 UF
22 24A8 500Ω
13 14Q2
08A6 3K
9 CR1
47 48A9 6.8 UF
03A2 180Ω
03A2 150Ω
02Z1 1.5K
02Z1 1K
11A8 390Ω
11A8 500Ω
38 40C2 75 PF
59A17 1K
61 40CR2 HA
63A18 0.1 UF
49 28A11 100Ω
40 40CR2 HA
36 23CR2 HA
12CR2 HA
42Q4 28Q4
50 45A12 2K
50 45A12 1K
58 60A17 1K
54R7 53R6 1K
R5
44 54R7 475Ω
53 53A16 .02 UF
18 28A11 100Ω
48R5 49R7 475Ω
51R3 49R2 1680Ω
52 60A16 .02 UF
27CR3 28CR1 CE
20CR3 22CR1 CE
23 24Q1
34 28Q2
18 28A11 100Ω
30R3 27R2 680Ω
55C3 .001 UF
31A14 4.3K
31A14 75Ω
19C1 .22 UF
25R1 27R3 510Ω
33 28A15 510 PF
43R4 49R5 825Ω
39Q3 40Q4
52 60CR4 DT
45R6 49R4 100Ω
60 60R9 200Ω
57R2 50RT 140Ω
62 60CR5 CD
64 69A2 180Ω
56 60R8 2.80K
14 18A9 6.8 UF
10A7 .68 UF
25 26A7 .68 UF
32A7 .68 UF
35 36A7 .68 UF
UNUSED COMPONENT
15 17Z2
MARKED PRINT
24 MAY 66
FILE IN PLACE OF 162381/B
TEST TO 167079/B
NOTE: 165491/C
THIS E.C. 169198/C IS TO FACILITATE REWORKING OF ALL STOCK OF 5804661 INTO 5800878 E/C 167079/B. UPON DEPLETION OF STOCK, 5804661 IS TO BECOME OBSOLETE.
CIRCUIT AND PACKAGING STANDARD
APPROVAL
DATE
INTERNATIONAL BUSINESS MACHINES CORP.
NAME DETECTOR
DESIGN
DETAIL JB 10-9-4
CHECK TH 10-13-4
APPRO
MODEL VFO
SCALE NONE
DRAW JB 10-9-4
CHECK TH 10-13-4
DATE
CHANGE NO.
APPROVAL
10-20-64 161883
12-17-64 162381
165491/C
DEVELOPMENT NO.
SS486
5804661
C