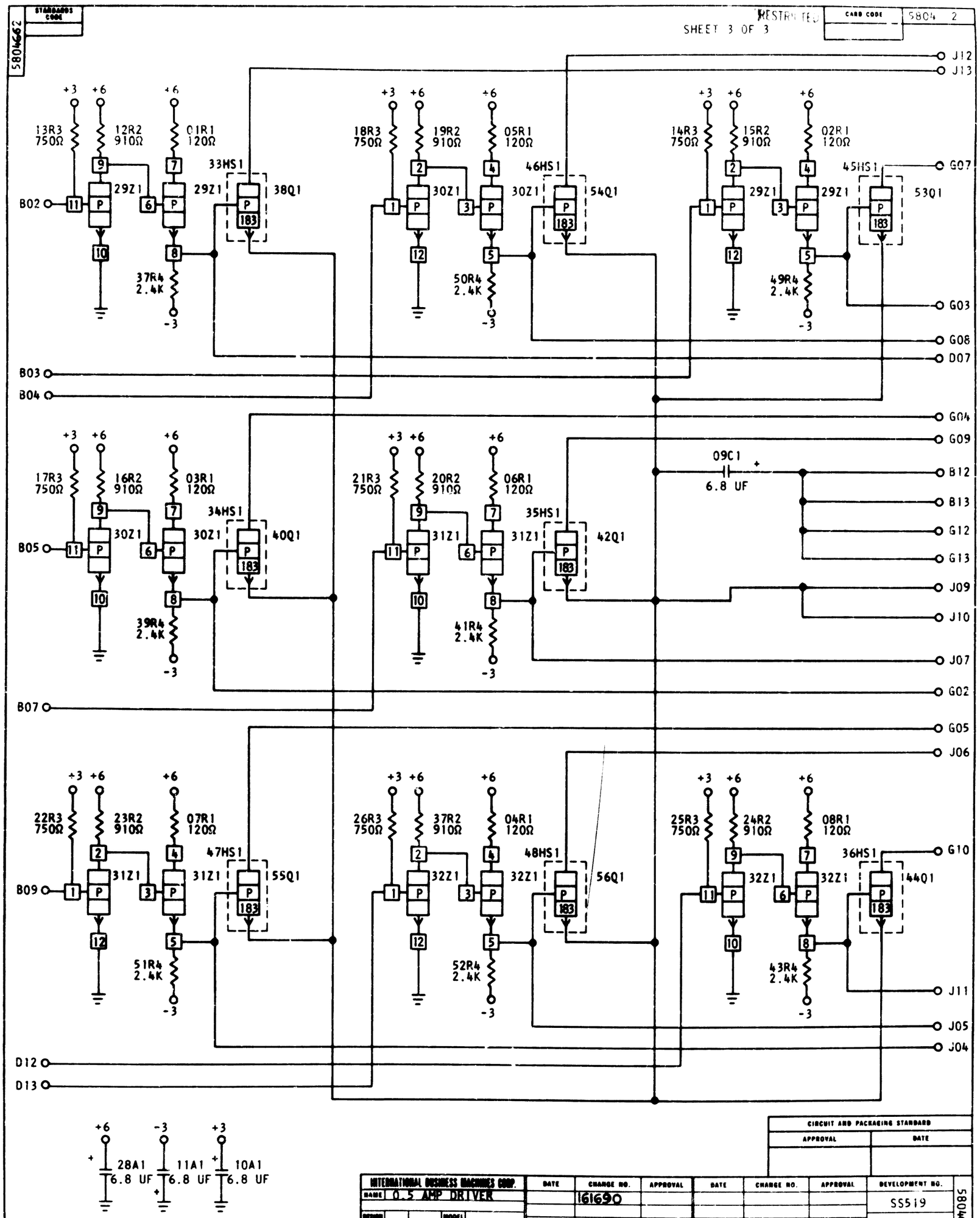
5804662
STANDARDS CODE
RESTRICTED
SHEET 3 OF 3
CARD CODE
5804 2
J12
J13
G07
G03
G08
D07
G04
G09
B12
B13
G12
G13
J09
J10
J07
G02
G05
J06
G10
J11
J05
J04
B02
B03
B04
B05
B07
B09
D12
D13
13R3 750Ω
12R2 910Ω
01R1 120Ω
33HS1
29Z1
38Q1
37R4 2.4K
18R3 750Ω
19R2 910Ω
05R1 120Ω
46HS1
30Z1
54Q1
50R4 2.4K
14R3 750Ω
15R2 910Ω
02R1 120Ω
45HS1
53Q1
49R4 2.4K
17R3 750Ω
16R2 910Ω
03R1 120Ω
34HS1
40Q1
39R4 2.4K
21R3 750Ω
20R2 910Ω
06R1 120Ω
35HS1
31Z1
42Q1
41R4 2.4K
09C1
6.8 UF
22R3 750Ω
23R2 910Ω
07R1 120Ω
47HS1
55Q1
51R4 2.4K
26R3 750Ω
37R2 910Ω
04R1 120Ω
48HS1
32Z1
56Q1
52R4 2.4K
25R3 750Ω
24R2 910Ω
08R1 120Ω
36HS1
44Q1
43R4 2.4K
28A1 6.8 UF
11A1 6.8 UF
10A1 6.8 UF
CIRCUIT AND PACKAGING STANDARD
APPROVAL
DATE
INTERNATIONAL BUSINESS MACHINES CORP.
NAME 0.5 AMP DRIVER
DESIGN
DETAIL
CHECK PEW 11-5-4
APPRO
MODEL
SCALE
DRAW AMS 10-13-4
CHECK
DATE
CHANGE NO.
APPROVAL
161690
DEVELOPMENT NO.
SS519
5804662
C