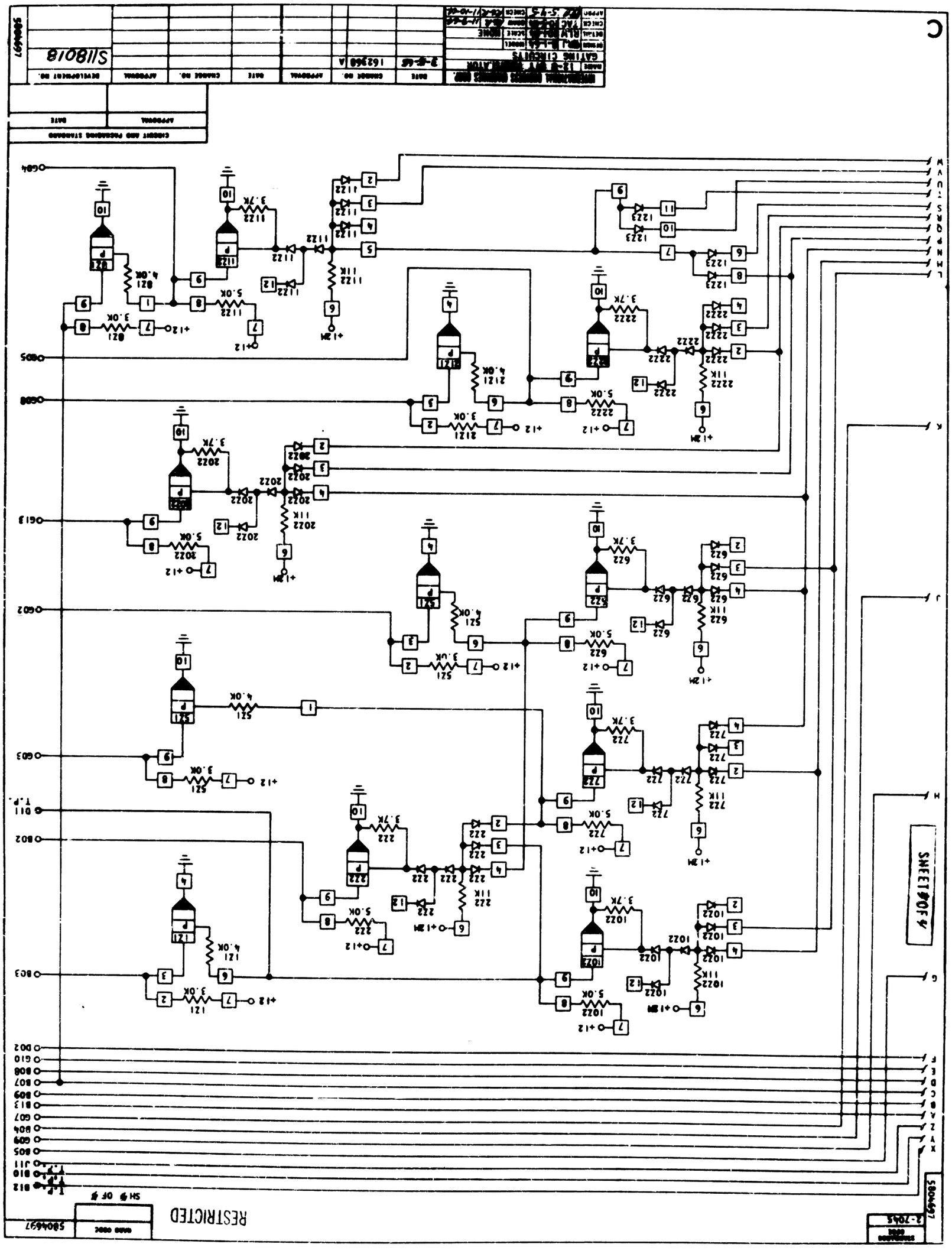
GATING CIRCUITS
SHEET 9 OF 9
RESTRICTED
5804697