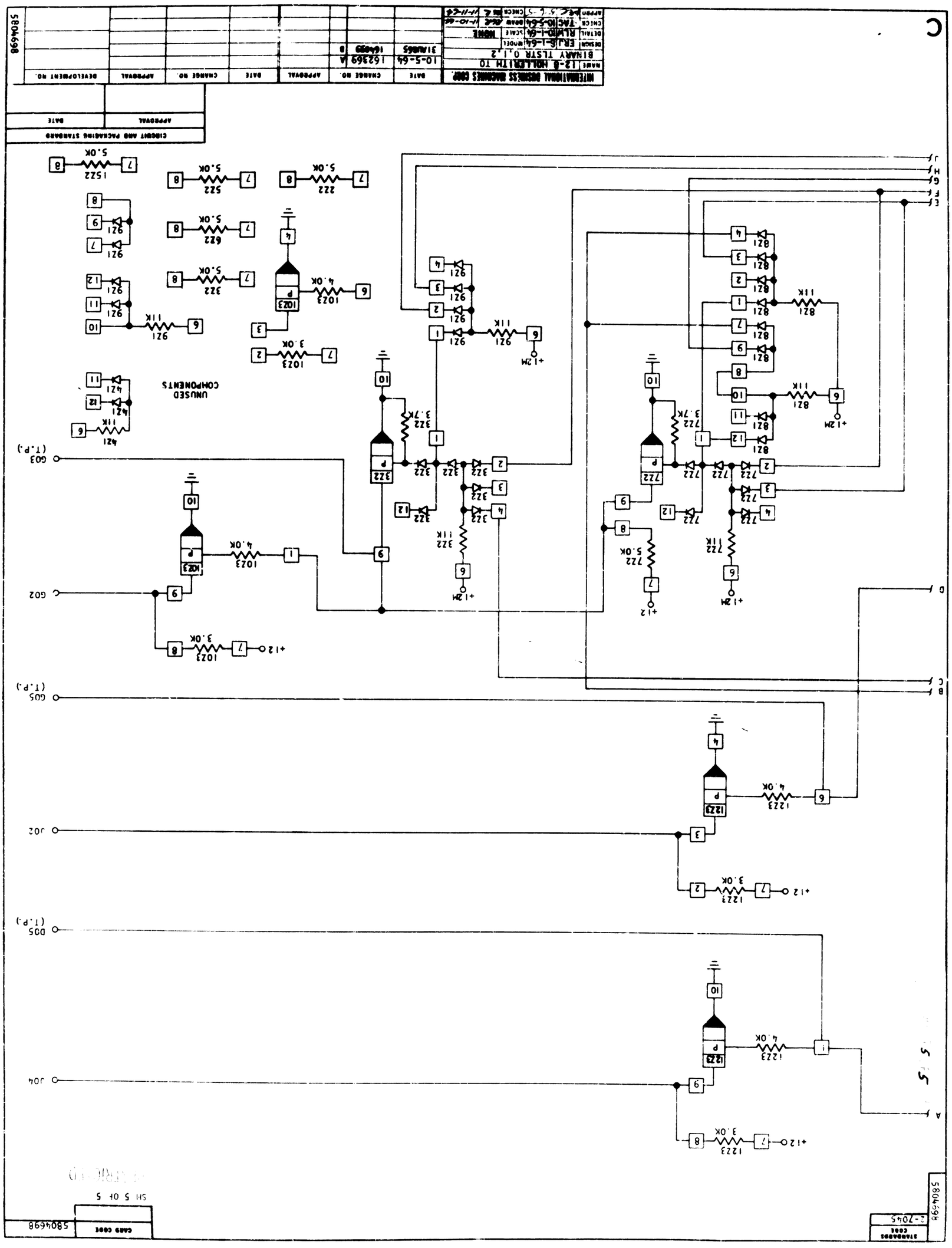
INTERNATIONAL BUSINESS MACHINES CORP.
NAME 12-8 HOLLERITH TO
BINARY TLSTR 0,1,2
DATE 10-5-64
CHANGE NO. 1523699 A
APPROVAL
DATE
CHANGE NO. 31AU065 16A0SD B
APPROVAL
DATE
CHANGE NO.
APPROVAL
DEVELOPMENT NO.
CIRCUIT AND PACKAGING STANDARD
APPROVAL
DATE
UNUSED COMPONENTS
G03 (T.P.)
G02
G05 (T.P.)
J02
D05 (T.P.)
J04
+12
+12M
+12
3.0K
4.0K
11K
3.7K
5.0K
1023
1223
921
821
722
322
622
522
222
1522
A
B
C
D
E
F
G
H
J
580469B
STANDARDS CODE
CARD CODE
SH 5 OF 5