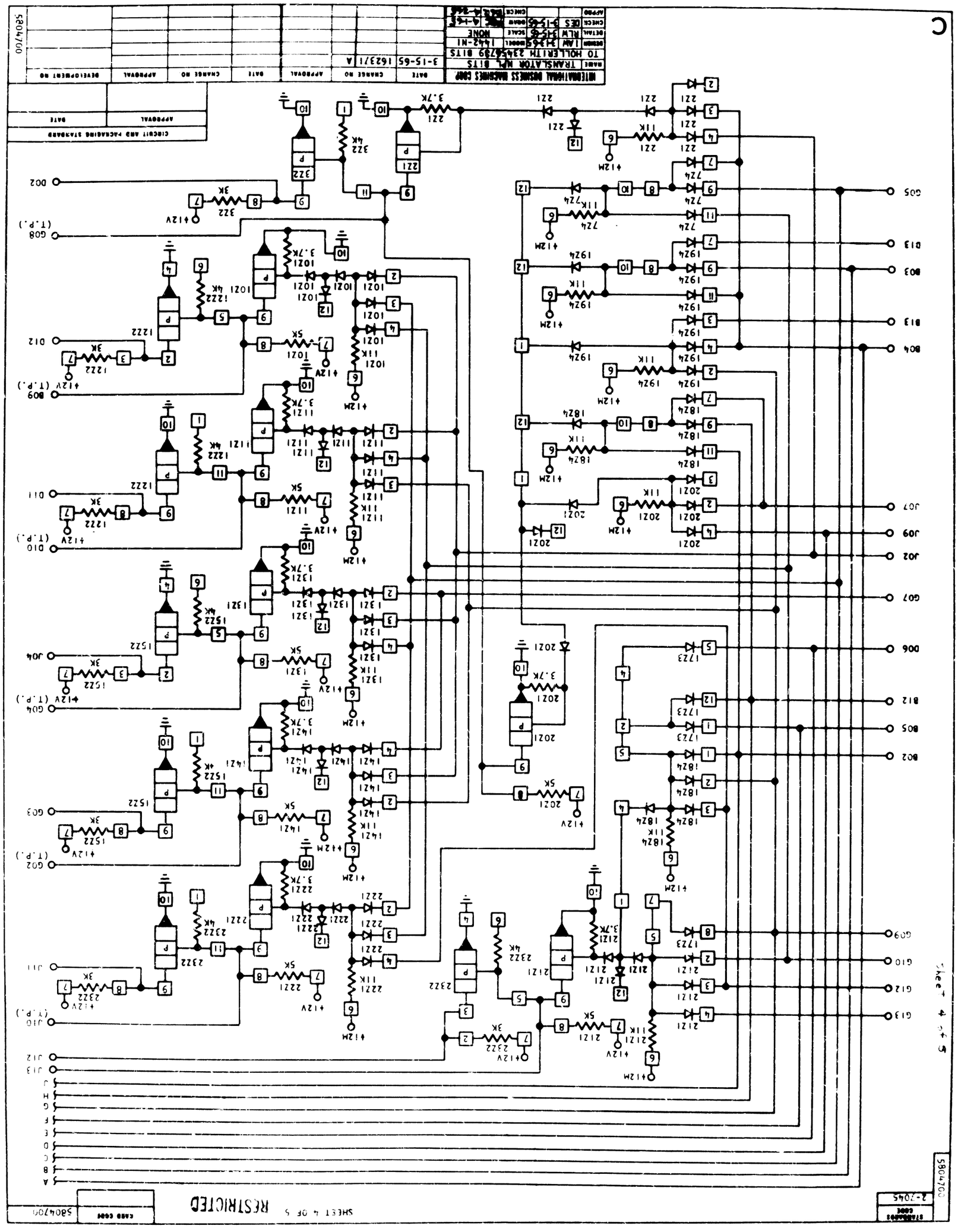
MILTON-MARTIN BUSINESS MACHINES CORP
NAME TRANSLATOR MPL BITS
TO HOLLERITH 2345789 BITS
DESIGN JAW 3-15-65 MODEL 1442-N1
DETAIL RLW 3-15-65 SCALE NONE
CHECK DES 3-15-65 DRAW
DATE CHANGE NO APPROVAL
3-15-65 162371 A
CIRCUIT ARD PACKAGING STANDARD
DATE APPROVAL
DEVELOPMENT NO
580470D
Sheet 4 of 5
RESTRICTED
SHEET 4 OF 5
580470D
2-2045