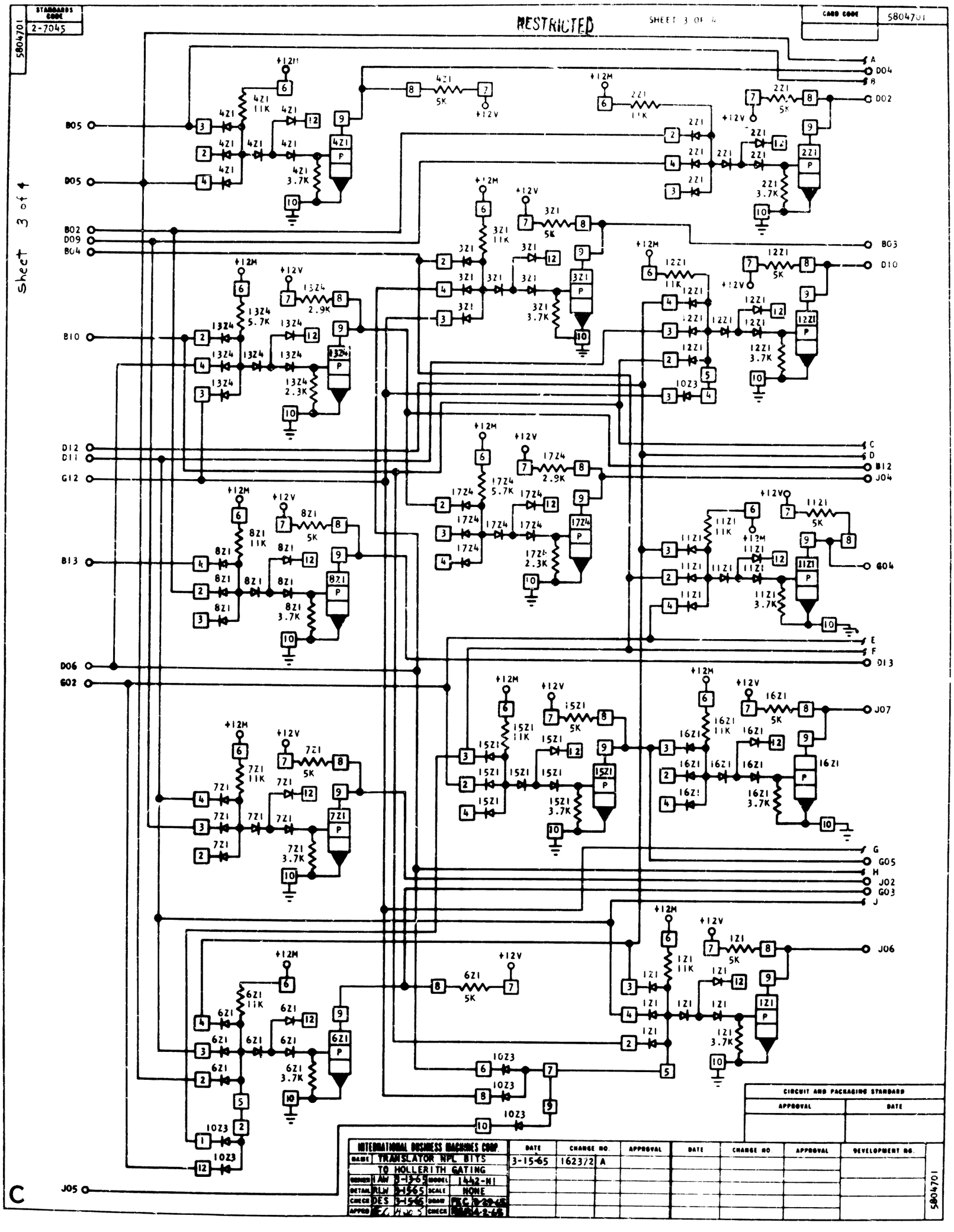
STANDARDS CODE
2-7045
5804701
RESTRICTED
SHEET 3 OF 4
CARD CODE
5804701
Sheet 3 of 4
+12M
+12V
4Z1 11K
4Z1 5K
4Z1 3.7K
2Z1 11K
2Z1 5K
2Z1 3.7K
3Z1 11K
3Z1 5K
3Z1 3.7K
12Z1 11K
12Z1 5K
12Z1 3.7K
13Z4 5.7K
13Z4 2.9K
13Z4 2.3K
10Z3
17Z4 5.7K
17Z4 2.9K
17Z4 2.3K
8Z1 11K
8Z1 5K
8Z1 3.7K
11Z1 11K
11Z1 5K
11Z1 3.7K
15Z1 11K
15Z1 5K
15Z1 3.7K
16Z1 11K
16Z1 5K
16Z1 3.7K
7Z1 11K
7Z1 5K
7Z1 3.7K
6Z1 11K
6Z1 5K
6Z1 3.7K
1Z1 11K
1Z1 5K
1Z1 3.7K
A
D04
B
D02
B05
D05
B02
D09
B04
B03
D10
B10
D12
D11
G12
C
D
B12
J04
B13
G04
E
F
D13
D06
G02
J07
G
G05
H
J02
G03
J
J06
J05
INTERNATIONAL BUSINESS MACHINES CORP.
NAME TRANSLATOR NPL BITS TO HOLLERITH GATING
DRAWN IAW 3-13-65 MODEL 1442-N1
DETAIL RLW 3-15-65 SCALE NONE
CHECK DES 3-15-65 DRAW
APPRO CHANGE 5 CHECK
DATE 3-15-65 CHANGE NO. 1623/2 A
APPROVAL
DATE
CHANGE NO
APPROVAL
DEVELOPMENT NO.
CIRCUIT AND PACKAGING STANDARD
APPROVAL
DATE
5804701
C