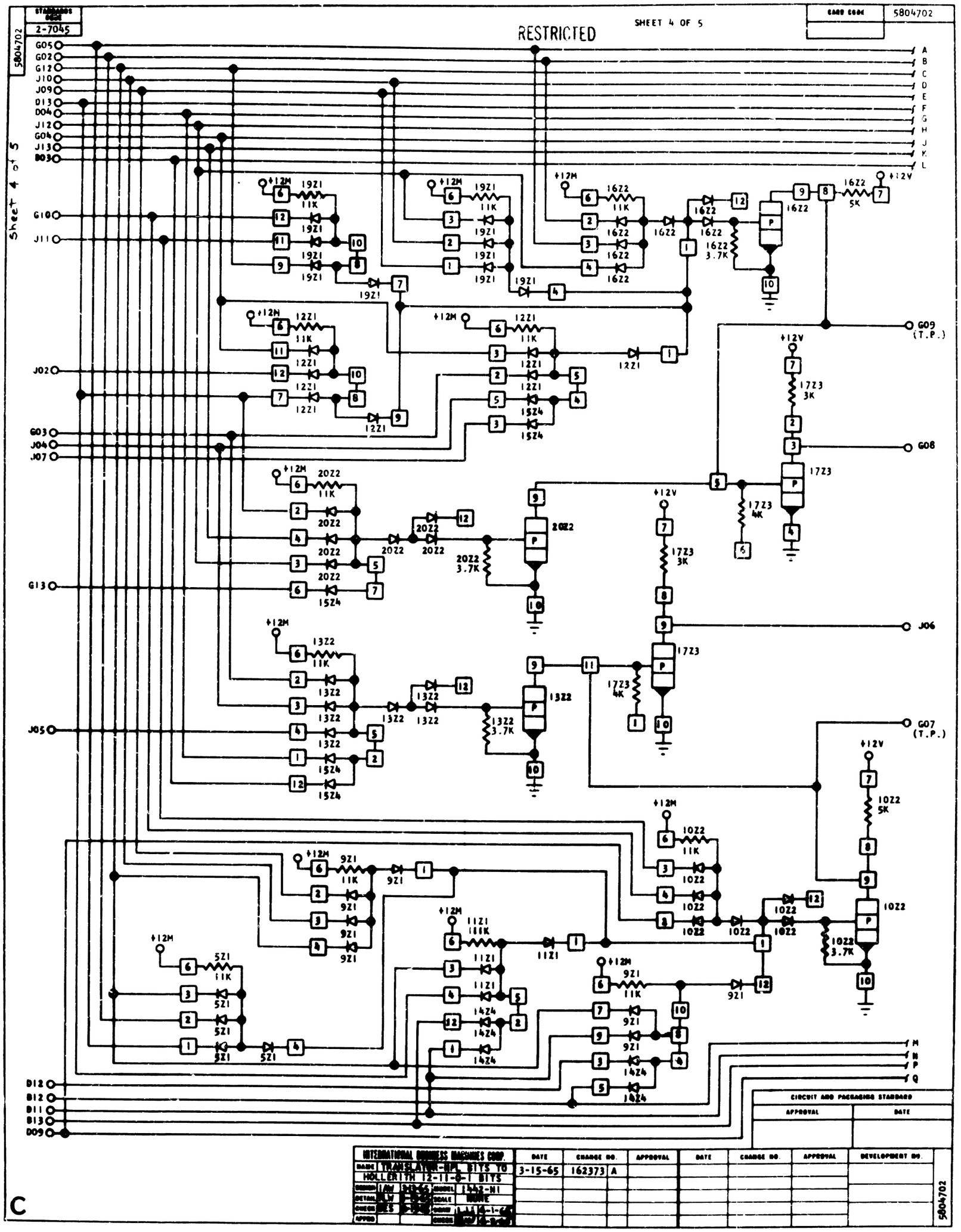
RESTRICTED
SHEET 4 OF 5
5804702
2-7045
Sheet 4 of 5
G05
G02
G12
J10
J09
D13
D04
J12
G04
J13
D03
G10
J11
J02
G03
J04
J07
G13
J05
D12
B12
D11
B13
D09
A
B
C
D
E
F
G
H
J
K
L
M
N
P
Q
G09 (T.P.)
G08
J06
G07 (T.P.)
+12M
+12V
19Z1
11K
16Z2
5K
16Z2 3.7K
12Z1
15Z4
17Z3 3K
17Z3 4K
20Z2
20Z2 3.7K
13Z2
13Z2 3.7K
10Z2 5K
10Z2 3.7K
9Z1
11Z1
14Z4
5Z1
CIRCUIT AND PACKAGING STANDARD
APPROVAL
DATE
INTERNATIONAL BUSINESS MACHINES CORP.
TRANSLATOR-HPL BITS TO HOLLERITH 12-11-0-1 BITS
1442-M1
NONE
3-15-65
162373
A
DATE
CHANGE NO.
APPROVAL
DEVELOPMENT NO.
5804702
C