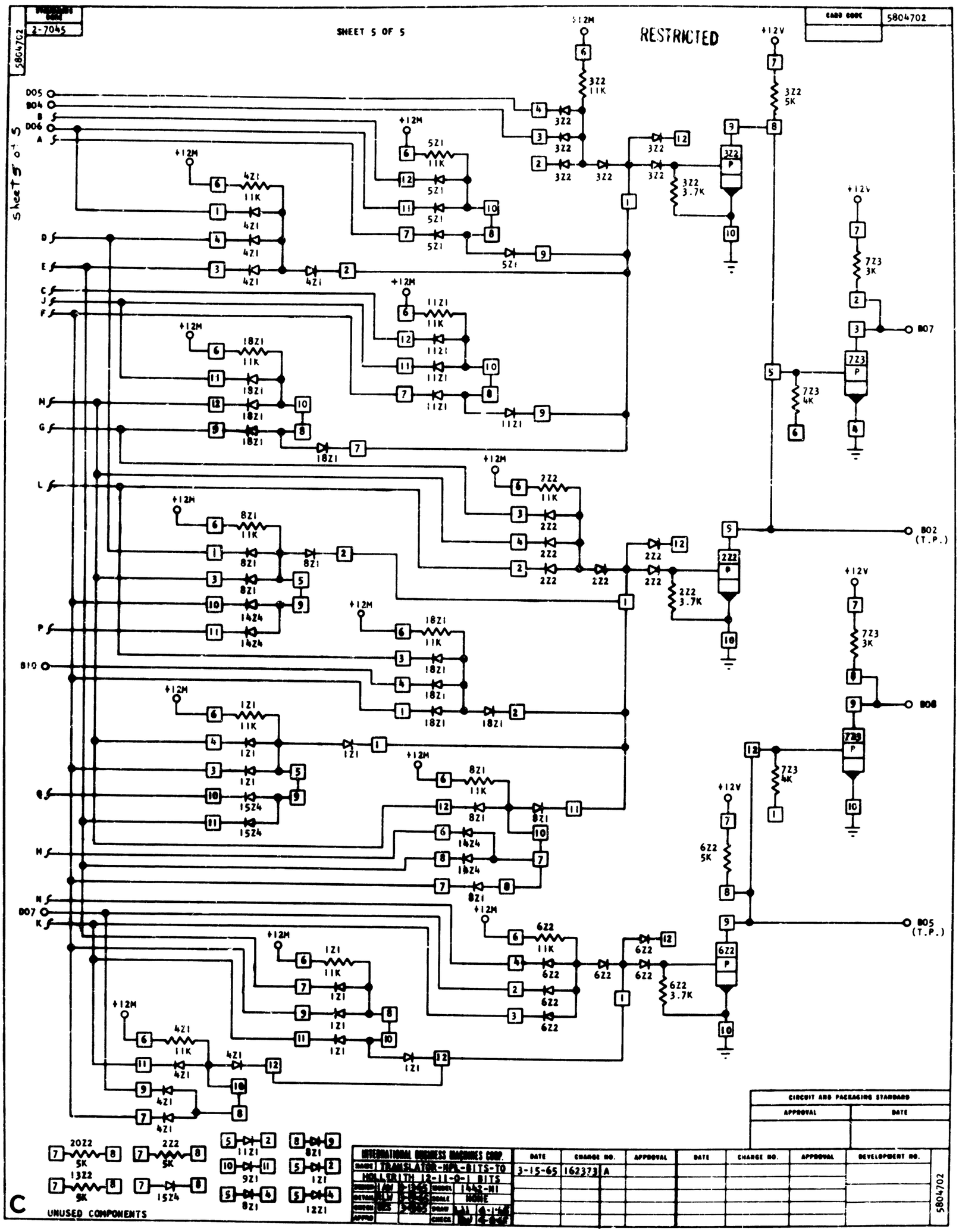
2-7045
SHEET 5 OF 5
RESTRICTED
5804702
Sheet 5 of 5
D05
B04
B
D06
A
D
E
C
J
F
N
G
L
P
B10
Q
M
H
D07
K
B07
B02 (T.P.)
B08
B05 (T.P.)
+12M
+12V
3Z2 11K
3Z2 5K
3Z2 3.7K
5Z1 11K
4Z1 11K
11Z1 11K
18Z1 11K
2Z2 11K
8Z1 11K
18Z1 11K
1Z1 11K
8Z1 11K
6Z2 11K
7Z3 3K
7Z3 4K
6Z2 5K
6Z2 3.7K
2Z2 3.7K
14Z4
15Z4
CIRCUIT AND PACKAGING STANDARD
APPROVAL
DATE
20Z2 5K
2Z2 5K
13Z2 5K
15Z4
11Z1
9Z1
8Z1
12Z1
UNUSED COMPONENTS
INTERNATIONAL BUSINESS MACHINES CORP.
TRANSLATOR-NPN-BITS-TO
HOLLERITH 12-11-0-1 BITS
1442-N1
NONE
3-15-65
162373
A
DATE
CHANGE NO.
APPROVAL
DEVELOPMENT NO.
5804702