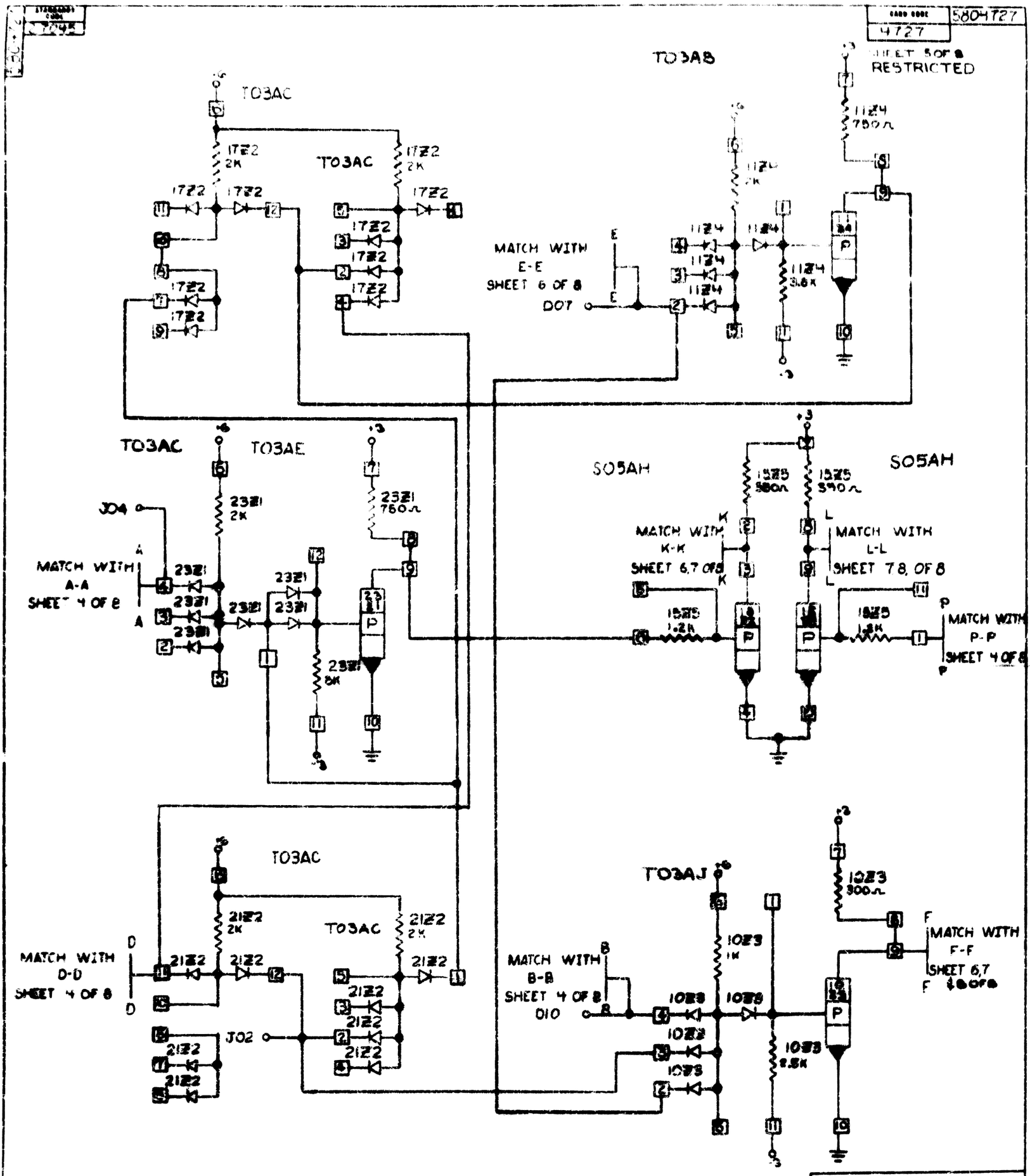
5804727
4727
SHEET 5 OF 8
RESTRICTED
T03AB
T03AC
T03AC
T03AC
T03AE
S05AH
S05AH
T03AC
T03AC
T03AJ
MATCH WITH
E-E
SHEET 6 OF 8
D07
MATCH WITH
A-A
SHEET 4 OF 8
J04
MATCH WITH
K-K
SHEET 6,7 OF 8
MATCH WITH
L-L
SHEET 7,8, OF 8
MATCH WITH
P-P
SHEET 4 OF 8
MATCH WITH
D-D
SHEET 4 OF 8
J02
MATCH WITH
B-B
SHEET 4 OF 8
D10
MATCH WITH
F-F
SHEET 6,7
SHEET 4 OF 8
CIRCUIT AND PACKAGING STANDARD
APPROVAL
DATE
10-20-64
DEVELOPMENT NO.
5804727
C