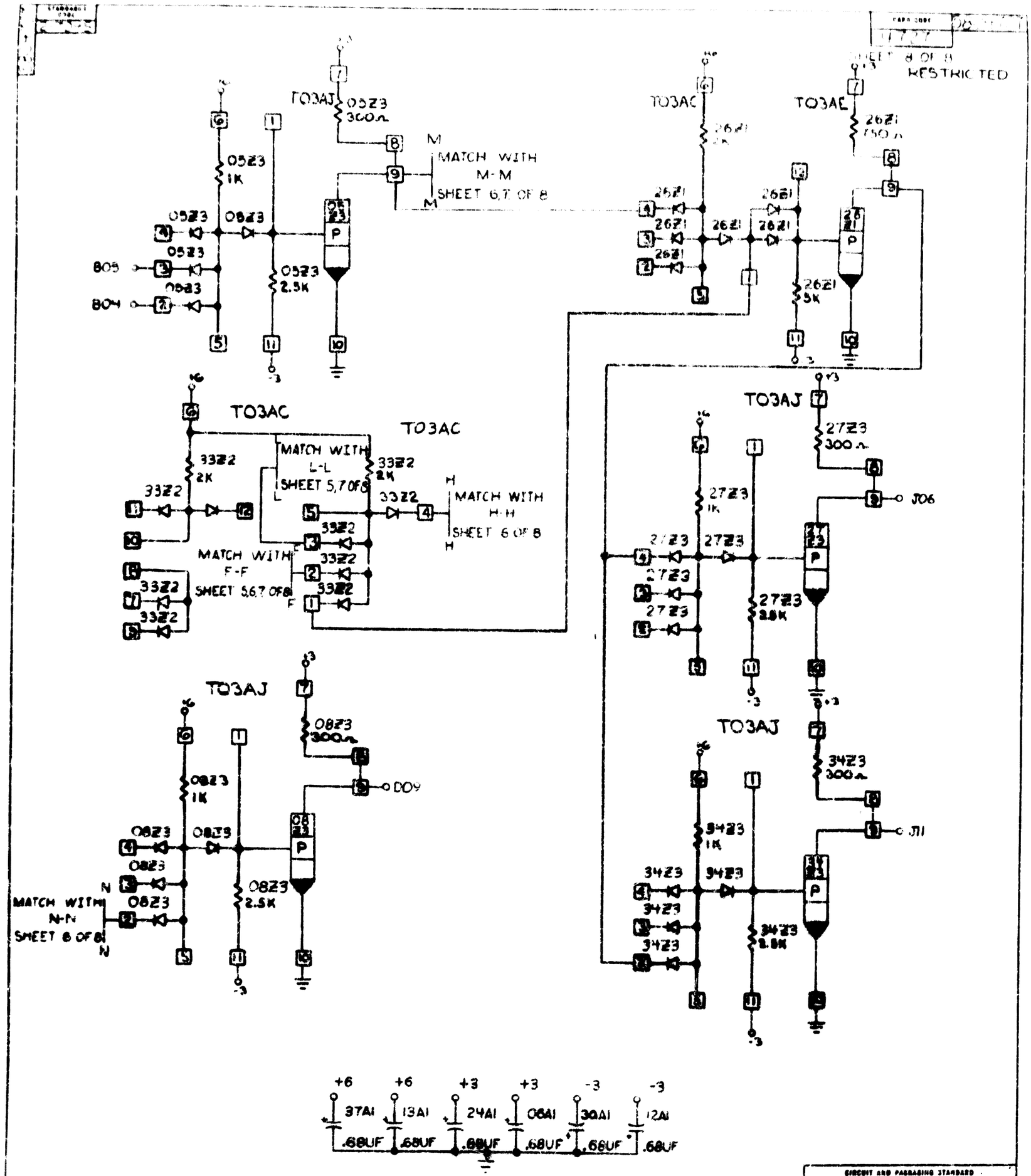
SHEET 8 OF 8
RESTRICTED
TO3AJ
05Z3
300Ω
M
MATCH WITH
M-M
SHEET 6,7 OF 8
05Z3
1K
08Z3
05Z3
2.5K
B05
B04
TO3AC
26Z1
2K
TO3AE
26Z1
750Ω
26Z1
5K
TO3AC
TO3AC
MATCH WITH
L-L
SHEET 5,7 OF 8
33Z2
2K
H
MATCH WITH
H-H
SHEET 6 OF 8
MATCH WITH
F-F
SHEET 5,6,7 OF 8
TO3AJ
27Z3
300Ω
J06
27Z3
1K
27Z3
2.8K
TO3AJ
08Z3
300Ω
D09
08Z3
1K
08Z3
2.5K
N
MATCH WITH
N-N
SHEET 8 OF 8
TO3AJ
34Z3
300Ω
J11
34Z3
1K
34Z3
2.8K
+6
37A1
.68UF
+6
13A1
.68UF
+3
24A1
.68UF
+3
06A1
.68UF
-3
30A1
.68UF
-3
12A1
.68UF
CIRCUIT AND PACKAGING STANDARD
APPROVAL
DATE
10-20-64
DATE
CHANGE NO.
APPROVAL
DEVELOPMENT NO.
5804727
C