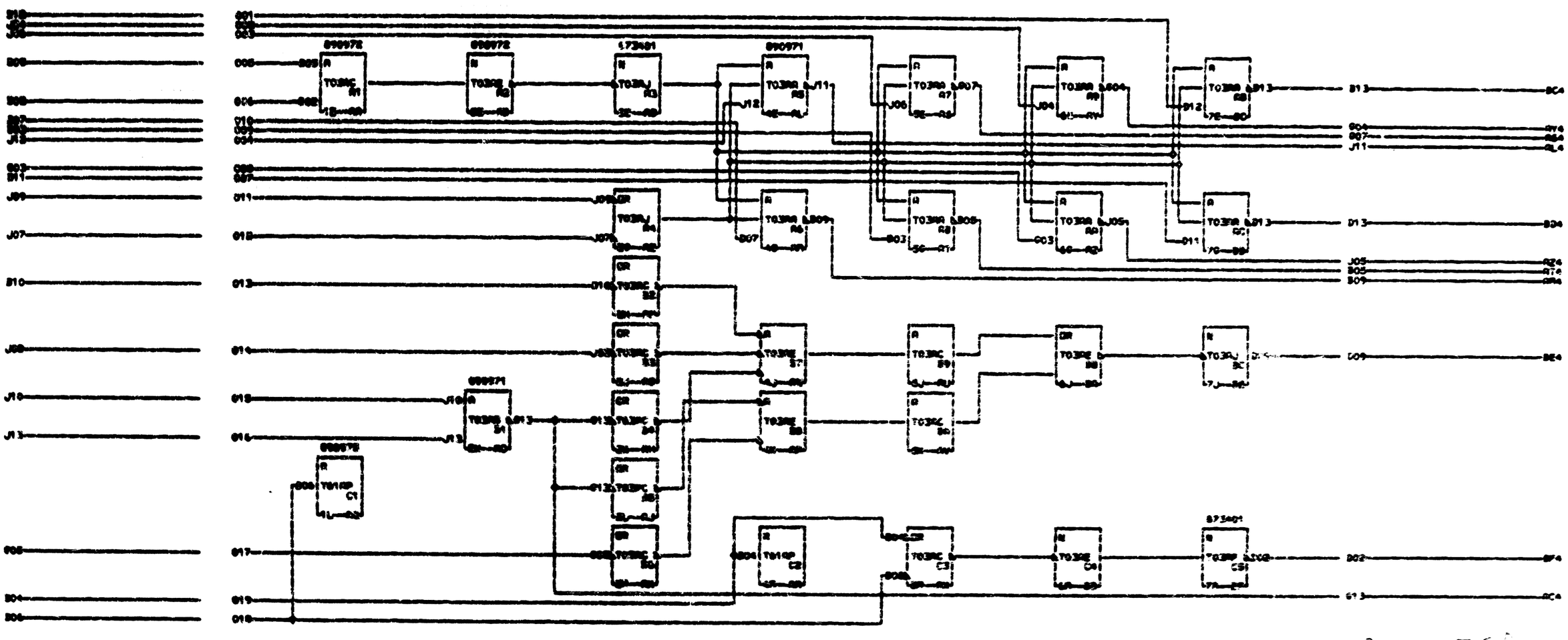

CARD 873280 2 36 PRC 703
VOLTAGE PINS
4 +3V0000A/J03 -3V10000006
7 +6V0001C0011 GND0000A/J06
2 STANDARD RESTRICTED
8
1

000

11-20-64 162038

RESTRICTED

BYTE CHECK CONTROL

DATE 11-16-64	PROM ASSEMBLY	4
LOG 152	FRAME	7
CD PG 1 OF 1	P.No 5804728	2
IBM CORP. KN	PLX. BG	8
		1
		000