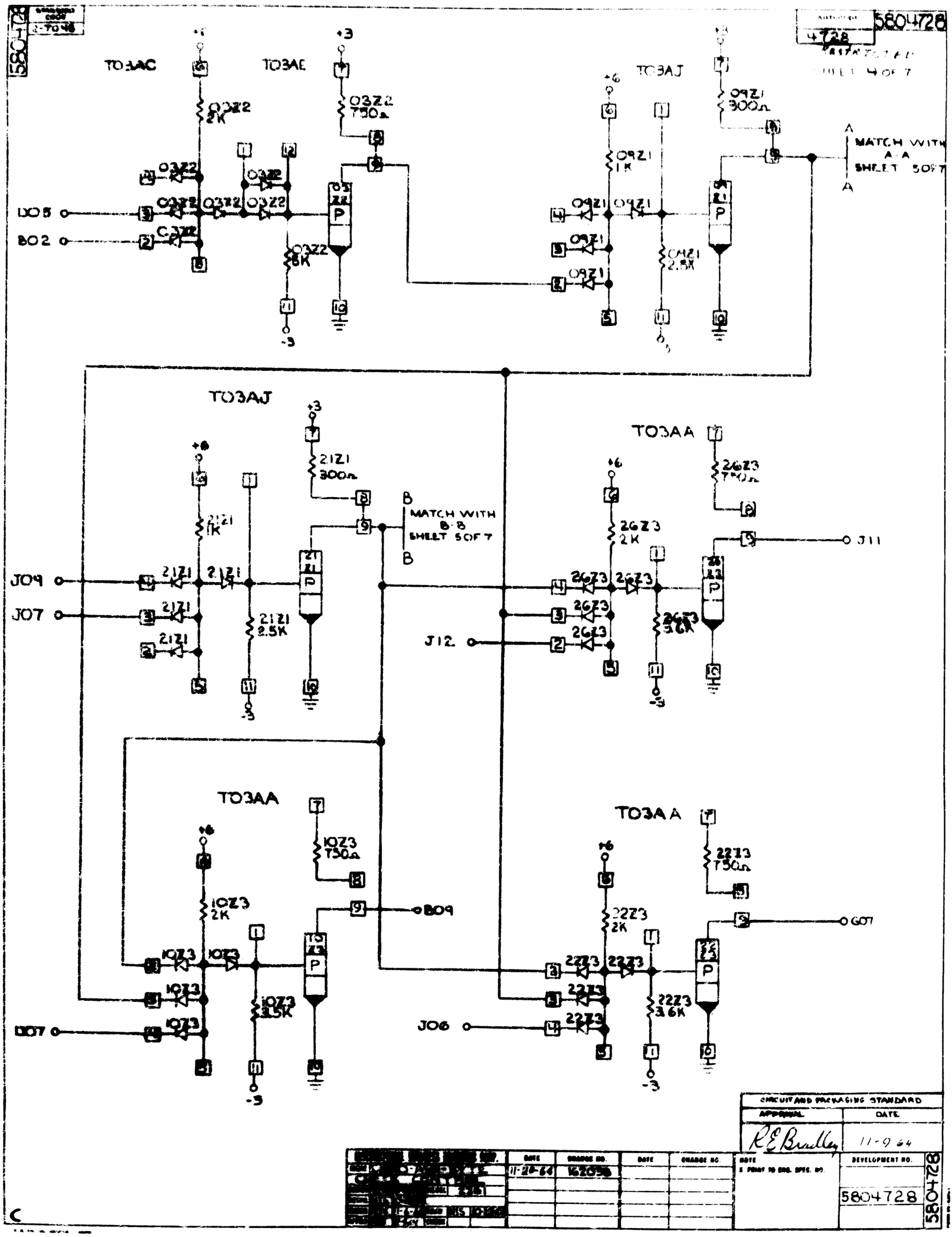
5804728
TO3AC
TO3AE
TO3AJ
TO3AJ
TO3AA
TO3AA
TO3AA
MATCH WITH A·A SHEET 5 OF 7
MATCH WITH B·B SHEET 5 OF 7
D05
B02
J09
J07
J12
J11
B09
D07
J06
G07
CIRCUIT AND PACKAGING STANDARD
APPROVAL
DATE
11-9-64
DEVELOPMENT NO.
5804728