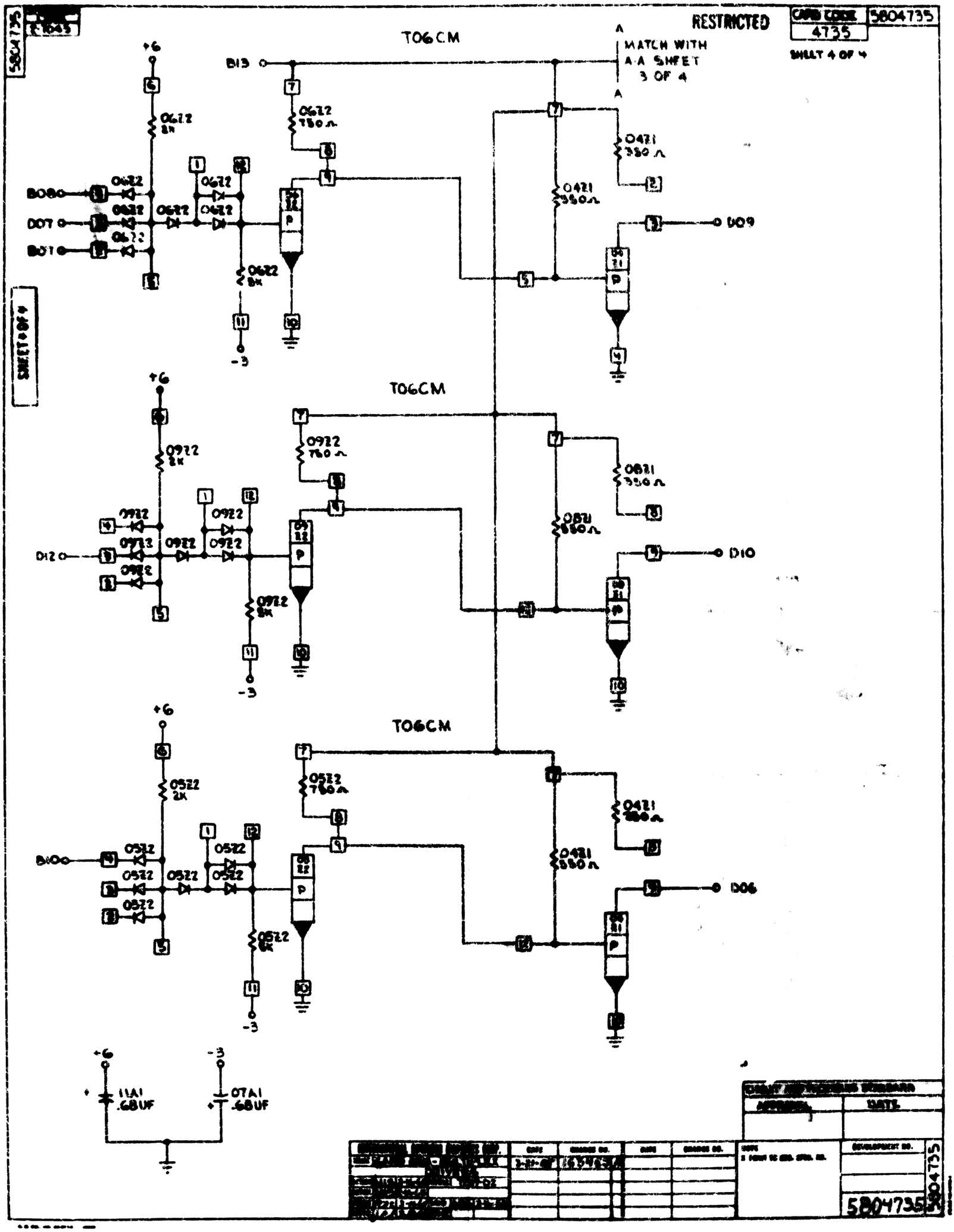
RESTRICTED
CARD CODE 5804735
4735
SHEET 4 OF 4
5804735
T06CM
MATCH WITH
A-A SHEET
3 OF 4
+6
B13
0622
2K
0622
750Ω
0421
330Ω
B08
D07
B01
D09
-3
SHEET 4 OF 4
T06CM
0922
2K
0922
750Ω
0821
330Ω
D12
D10
T06CM
0522
2K
0522
750Ω
0421
330Ω
B100
D06
C11A1
.68UF
C07A1
.68UF
5804735