STANDARDS CODE 2-7045

5804736

CARD CODE 4736

5804736

SHEET 3 OF 3
RESTRICTED

S 22 DI

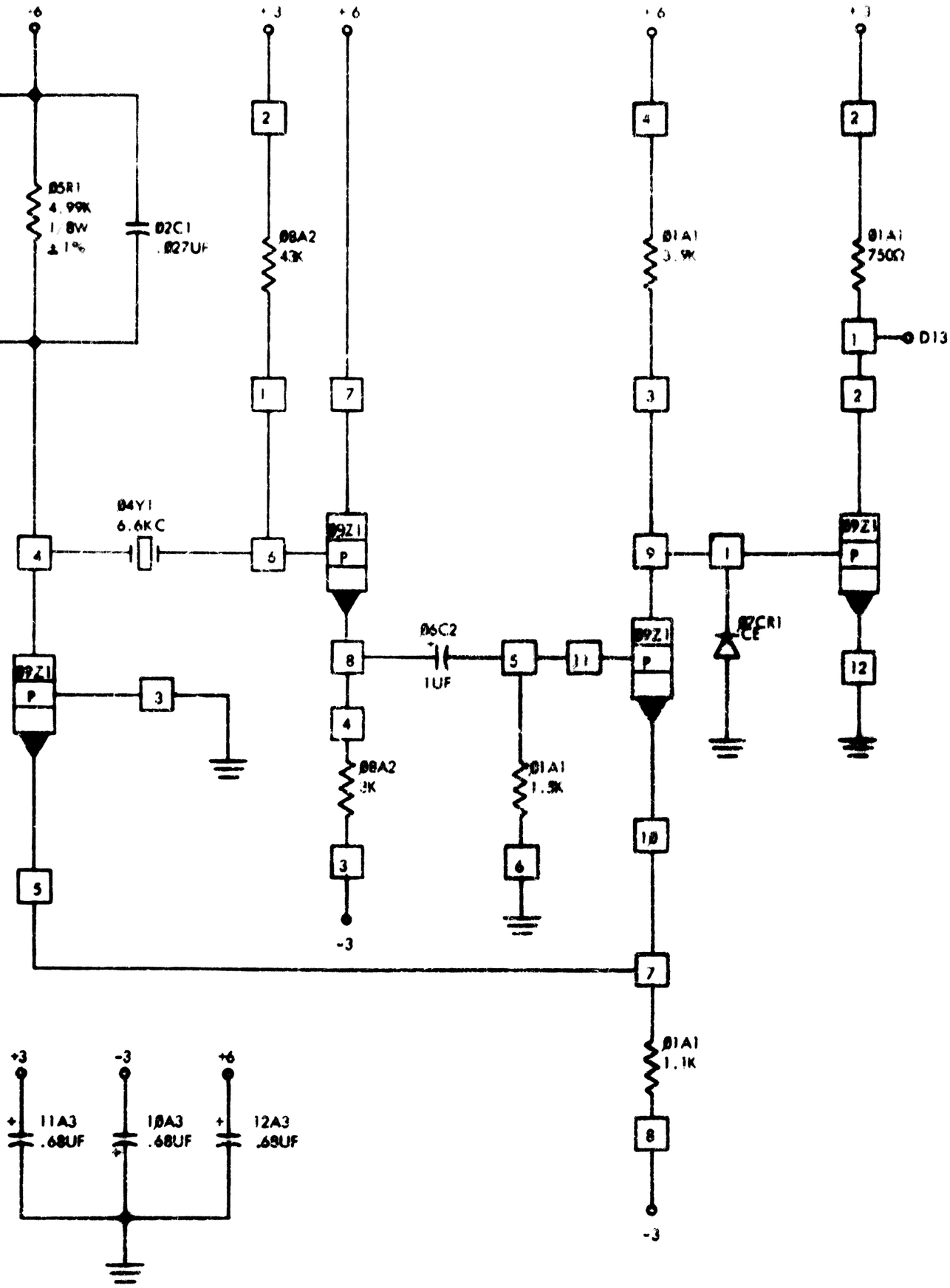

INTERNATIONAL BUSINESS MACHINES CORP.															
NAME	CARD ASM - 6.6KC OSCILLATOR						DATE	CHANGE NO.	DATE	CHANGE NO.	NOTE X PRINT TO ENG. SPEC. NO.	DEVELOPMENT NO.	5804736
DESIGN	RCB	OCT66	MODEL	2702			4-[illegible]-65	163451 A					
DETAIL	CER	OCT66					01-09-67	169818 B					
CHECK	WEB	OCT66	DRAW	VR	DEC66		5-5-67	169813 /C					
APPRO	[illegible]	[illegible]	CHECK										