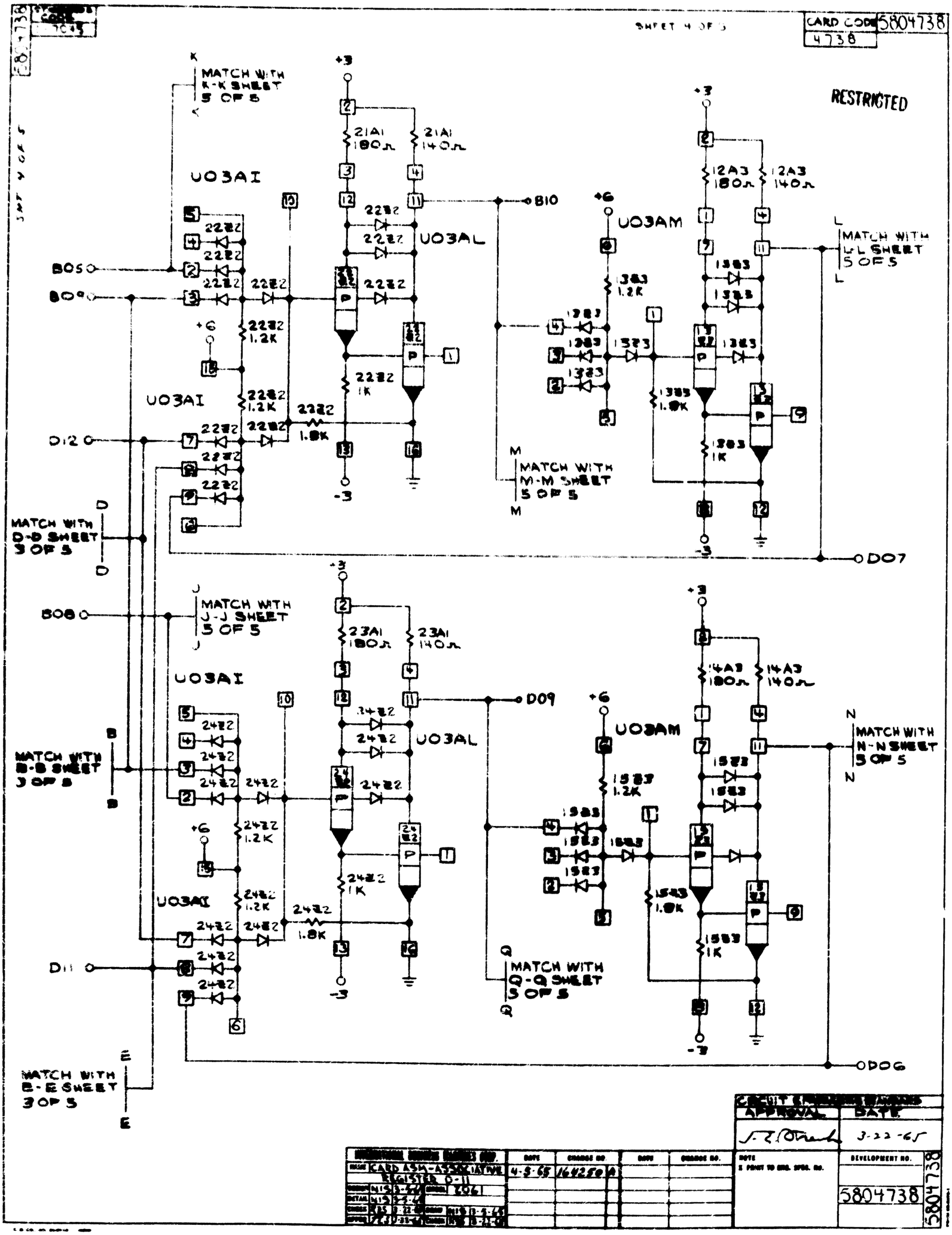
SHEET 4 OF 5
CARD CODE 5804738
4738
RESTRICTED
MATCH WITH K-K SHEET 5 OF 5
U03AI
U03AL
U03AM
B10
B05
B09
D12
D07
MATCH WITH L-L SHEET 5 OF 5
MATCH WITH M-M SHEET 5 OF 5
MATCH WITH D-D SHEET 3 OF 5
B08
D09
D11
D06
MATCH WITH J-J SHEET 5 OF 5
MATCH WITH B-B SHEET 3 OF 5
MATCH WITH N-N SHEET 5 OF 5
MATCH WITH Q-Q SHEET 5 OF 5
MATCH WITH E-E SHEET 3 OF 5
CIRCUIT ENGINEERING APPROVAL
DATE
3-22-65
CARD ASM-ASSOCIATIVE REGISTER 0-11
4-5-65
164280
DEVELOPMENT NO.
5804738