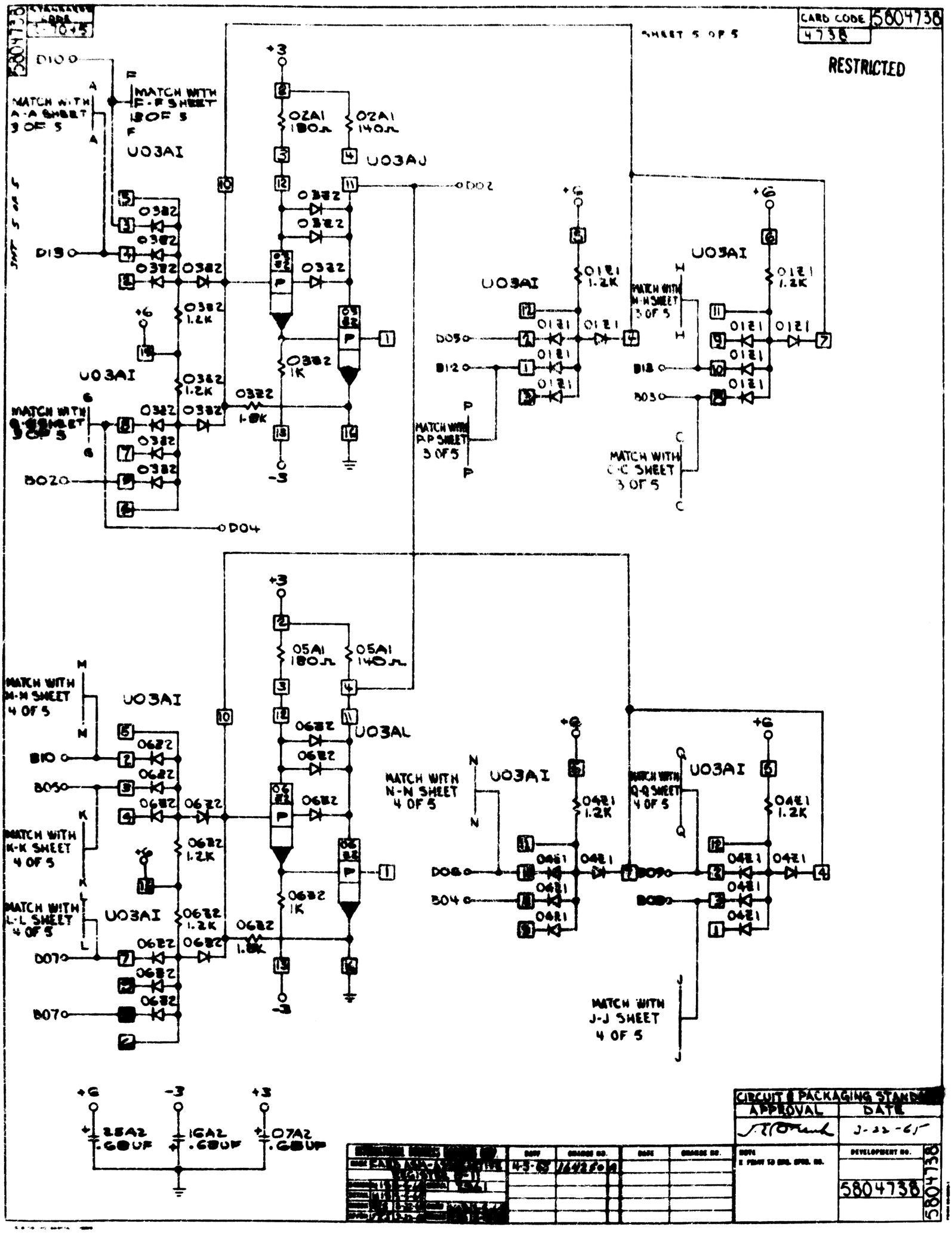
CARD CODE 5804738
4738
SHEET 5 OF 5
RESTRICTED
MATCH WITH A-A SHEET 3 OF 5
MATCH WITH F-F SHEET 1 OF 5
U03AI
U03AJ
U03AL
MATCH WITH M-M SHEET 3 OF 5
MATCH WITH P-P SHEET 3 OF 5
MATCH WITH C-C SHEET 3 OF 5
MATCH WITH M-M SHEET 4 OF 5
MATCH WITH K-K SHEET 4 OF 5
MATCH WITH L-L SHEET 4 OF 5
MATCH WITH N-N SHEET 4 OF 5
MATCH WITH Q-Q SHEET 4 OF 5
MATCH WITH J-J SHEET 4 OF 5
D10
D19
D02
D05
B12
B05
B02
D04
B10
D08
B04
D07
B07
02A1 180Ω
02A1 140Ω
05A1 180Ω
05A1 140Ω
0382 1.2K
0382 1K
0322 1.8K
0121 1.2K
0682 1.2K
0682 1K
0682 1.8K
0481 1.2K
25A2 .68UF
16A2 .68UF
07A2 .68UF
CIRCUIT & PACKAGING STANDARDS
APPROVAL
DATE
J-22-65
DEVELOPMENT NO.
5804738