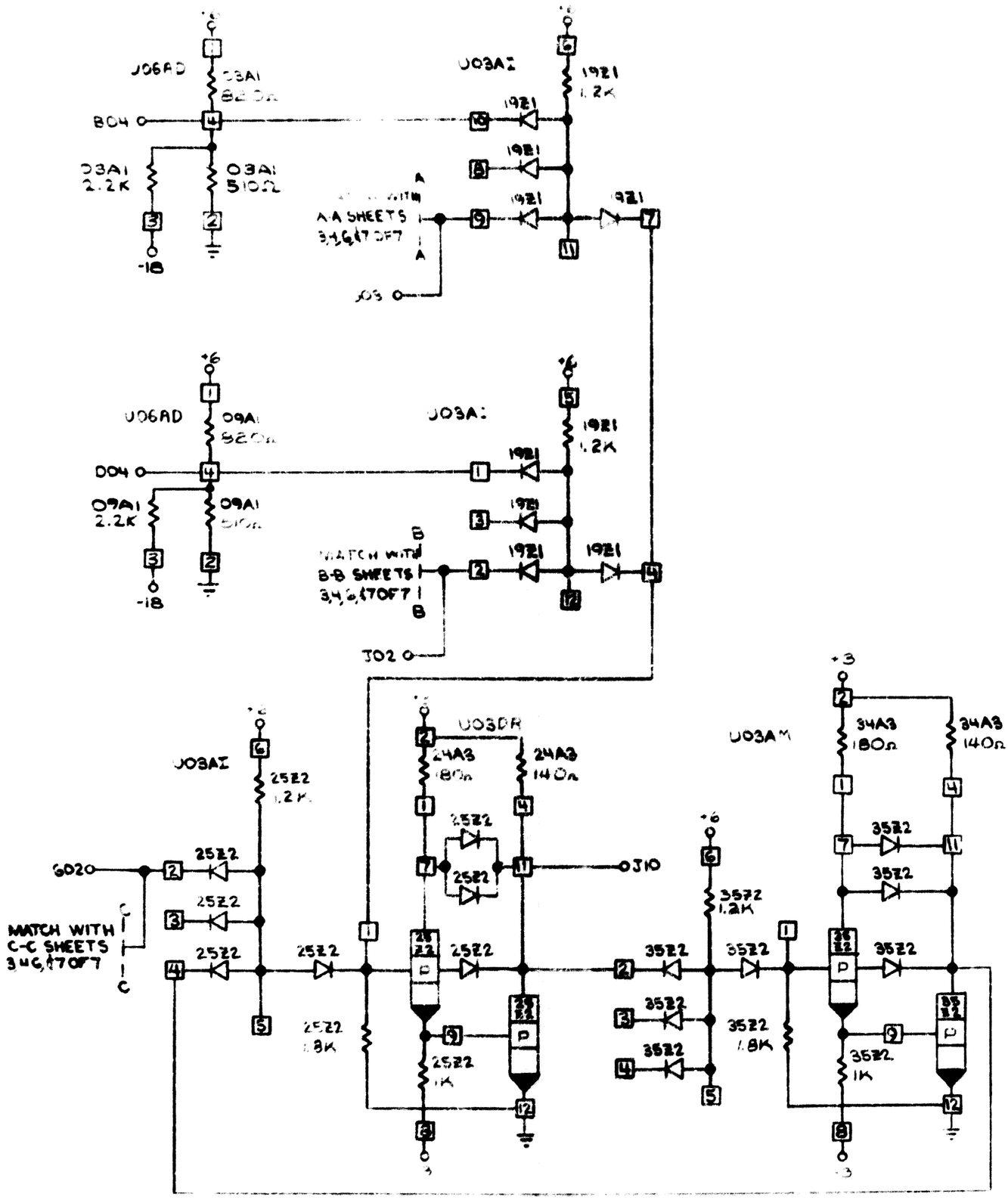

CIRCUIT & PACKAGING STANDARD	
APPROVAL	DATE
[illegible]	3-22-65

INTERNATIONAL BUSINESS MACHINES CORP.	DATE	CHANGE NO.	DATE	CHANGE NO.	NOTE	DEVELOPMENT NO.
PART: CARDASM-5 LATCHES WITH SENSE AMPLIFIER TERM.	4-1-65	163457			2 POINT TO ENG. SPEC. NO.	680-955
DESIGN: NB 8-65 ENGRG: C 13	7-23-65	164615				
DETAIL: NB 8-65	15 DEC 65	166179				5804739
CHK CD: RZS 8-1-65 DRAWN: NB 8-1-65						
APPRO: [illegible] CHK CD: RZS 8-1-65						