CARD CODE 4740 | 5804740

T45AØ, T45AP

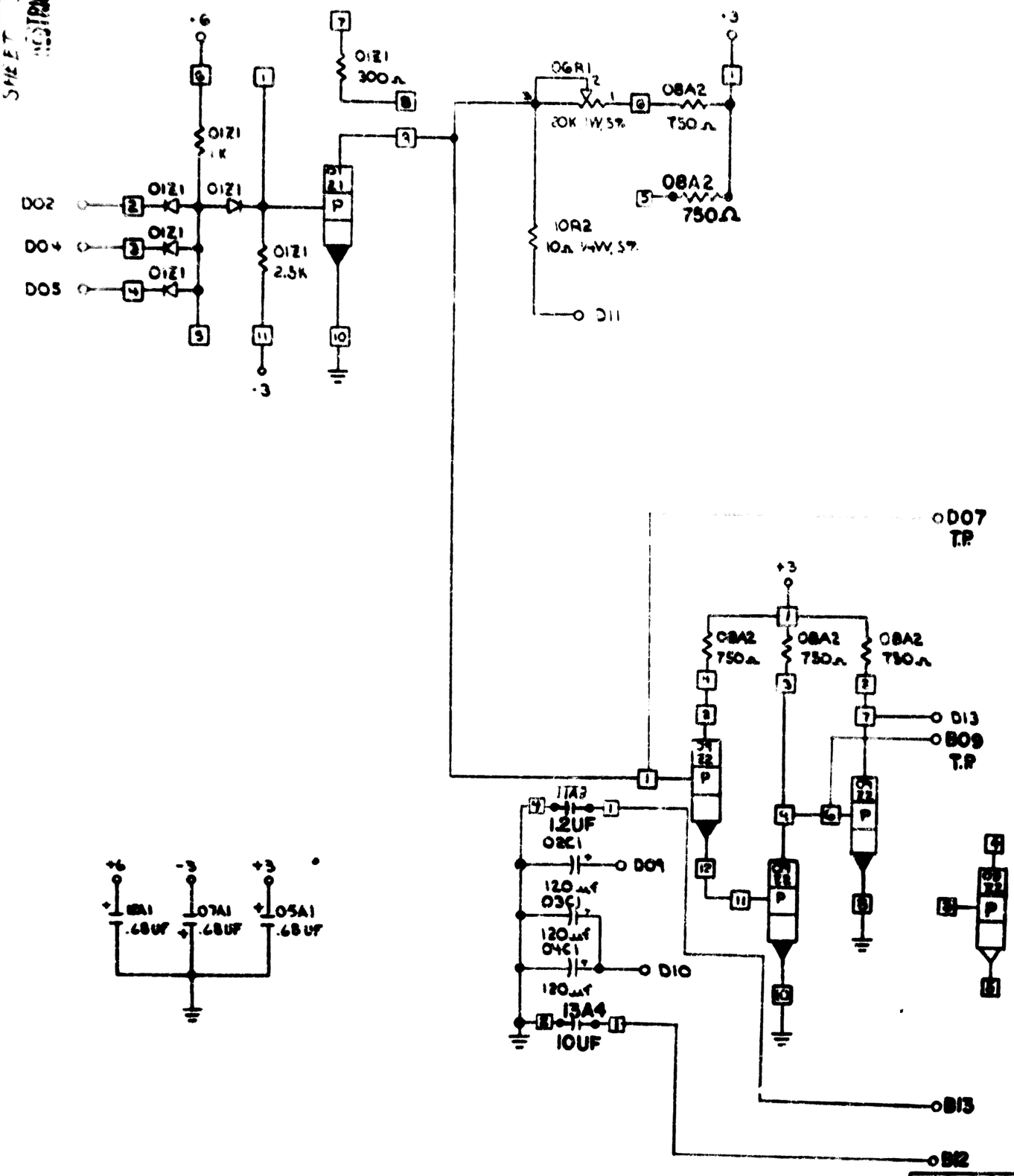

CIRCUIT & PACKAGING STANDARD	
APPROVAL	DATE

DATE	CHANGE NO.	DATE	CHANGE NO.
3-30-68			
8-23-68	6425 2 A		

DEVELOPMENT NO.

5804740