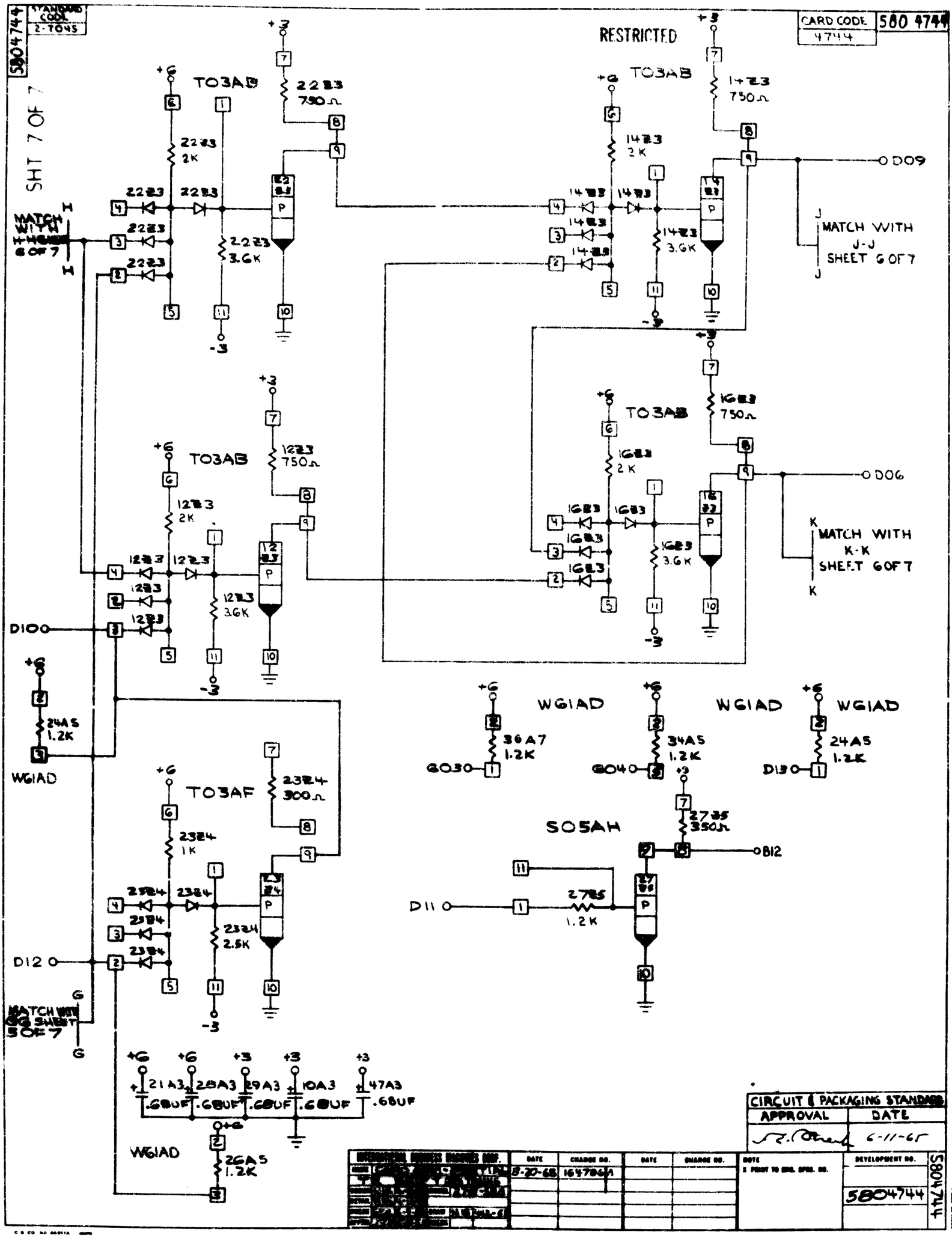
RESTRICTED
CARD CODE 580 4744
4744
STANDARD CODE 2-7045
5804744
SHT 7 OF 7
TO3AB
TO3AF
WG1AD
SO5AH
MATCH WITH H-H SHEET 6 OF 7
MATCH WITH J-J SHEET 6 OF 7
MATCH WITH K-K SHEET 6 OF 7
MATCH WITH G-G SHEET 5 OF 7
D09
D06
D10
D12
G030
G040
D13
B12
D11
CIRCUIT & PACKAGING STANDARDS
APPROVAL
DATE
6-11-65
DATE
CHANGE NO.
8-20-65
DEVELOPMENT NO.
5804744