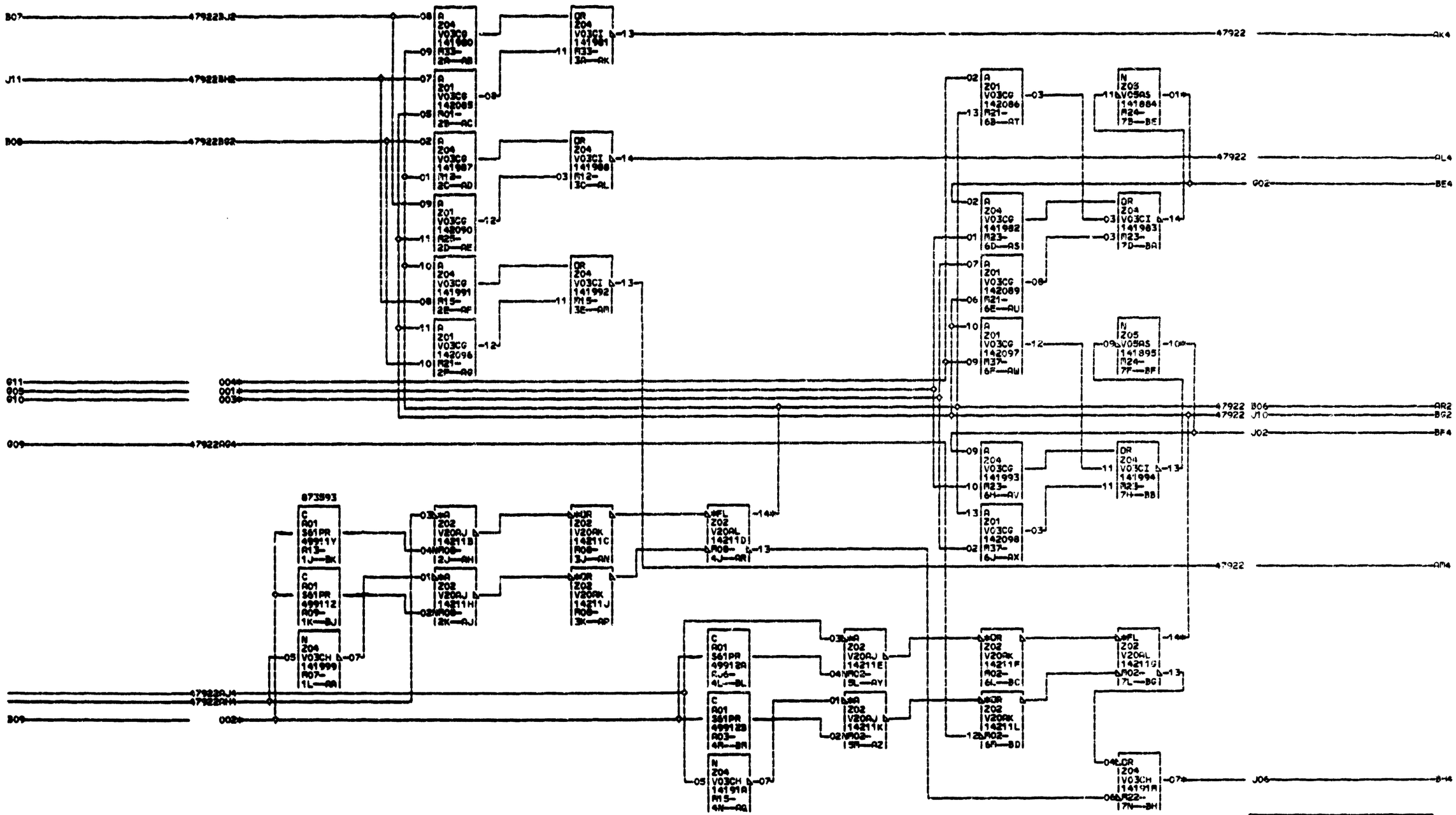

001	B06
005	BE4
002	BG2
B09	BM4
003	J02
G10	BG2
004	J10
G11	BM4
AR2	J06

TAPE AND COUNTER CONTROLS	
DATE 00-00-00 MACH. ASSEMBLY	
LOG 421 FRAME	
CD PG 3 OF 3 P.N. 5804792	
IBM CORP. KN BLK.	BN