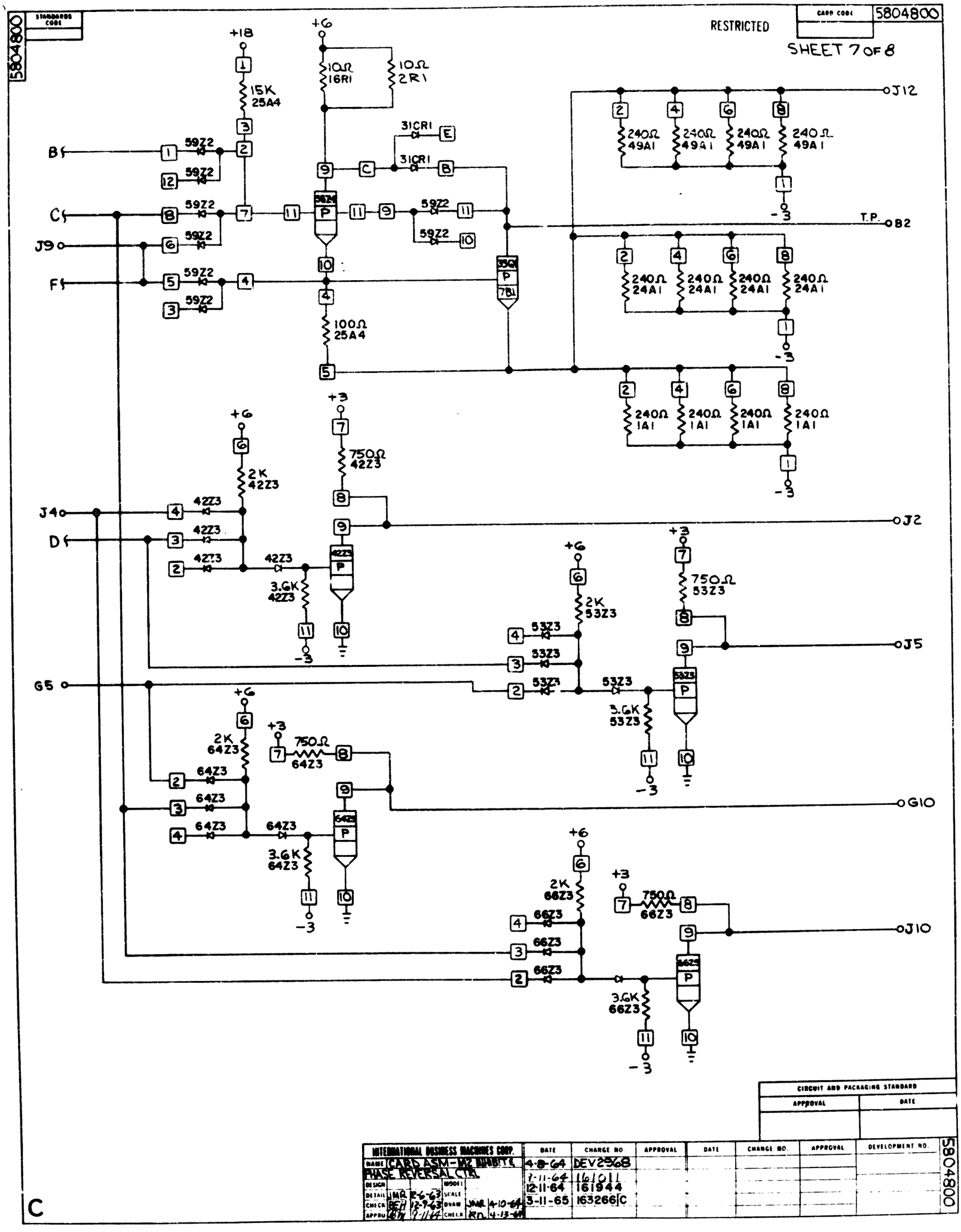
5804800
STANDARDS CODE
RESTRICTED
CARD CODE 5804800
SHEET 7 OF 8
+18
+6
15K 25A4
10Ω 16R1
10Ω 2R1
31CR1
E
B
C
J9
F
59Z2
35Z4
P
35Q
P
78L
100Ω 25A4
J12
240Ω 49A1
240Ω 24A1
240Ω 1A1
T.P.
B2
-3
+3
750Ω 42Z3
2K 42Z3
J4
D
42Z3
3.6K 42Z3
J2
2K 53Z3
750Ω 53Z3
53Z3
3.6K 53Z3
J5
G5
2K 64Z3
750Ω 64Z3
64Z3
3.6K 64Z3
G10
2K 66Z3
750Ω 66Z3
66Z3
3.6K 66Z3
J10
CIRCUIT AND PACKAGING STANDARD
APPROVAL
DATE
INTERNATIONAL BUSINESS MACHINES CORP.
NAME CARD ASM-MZ MAGNETIC PHASE REVERSAL CTR.
DESIGN
DETAIL JMR 12-6-63
CHECK BEH 12-9-63
APPRV 9-11-64
MODEL
SCALE
DRAWN JMR 4-10-64
CHKLR RN 4-13-64
DATE
CHANGE NO
APPROVAL
DEVELOPMENT NO.
4-8-64 DEV2568
7-11-64 161011
12-11-64 161944
3-11-65 163266C
5804800
C