STANDARDS CODE	CIRCUIT AND PACKAGING STANDARD		SYM	DATE	CHANGE NO.	TECH APPRO	SYM	DATE	CHANGE NO.	TECH APPRO	DEVELOPMENT NO.	G/B
2-7045	APPROVAL	DATE		5-22-64	REV 2000							
CARD CODE				10-20-64	161597							
4801											5804801	

SHEET 8 OF 10

RESTRICTED

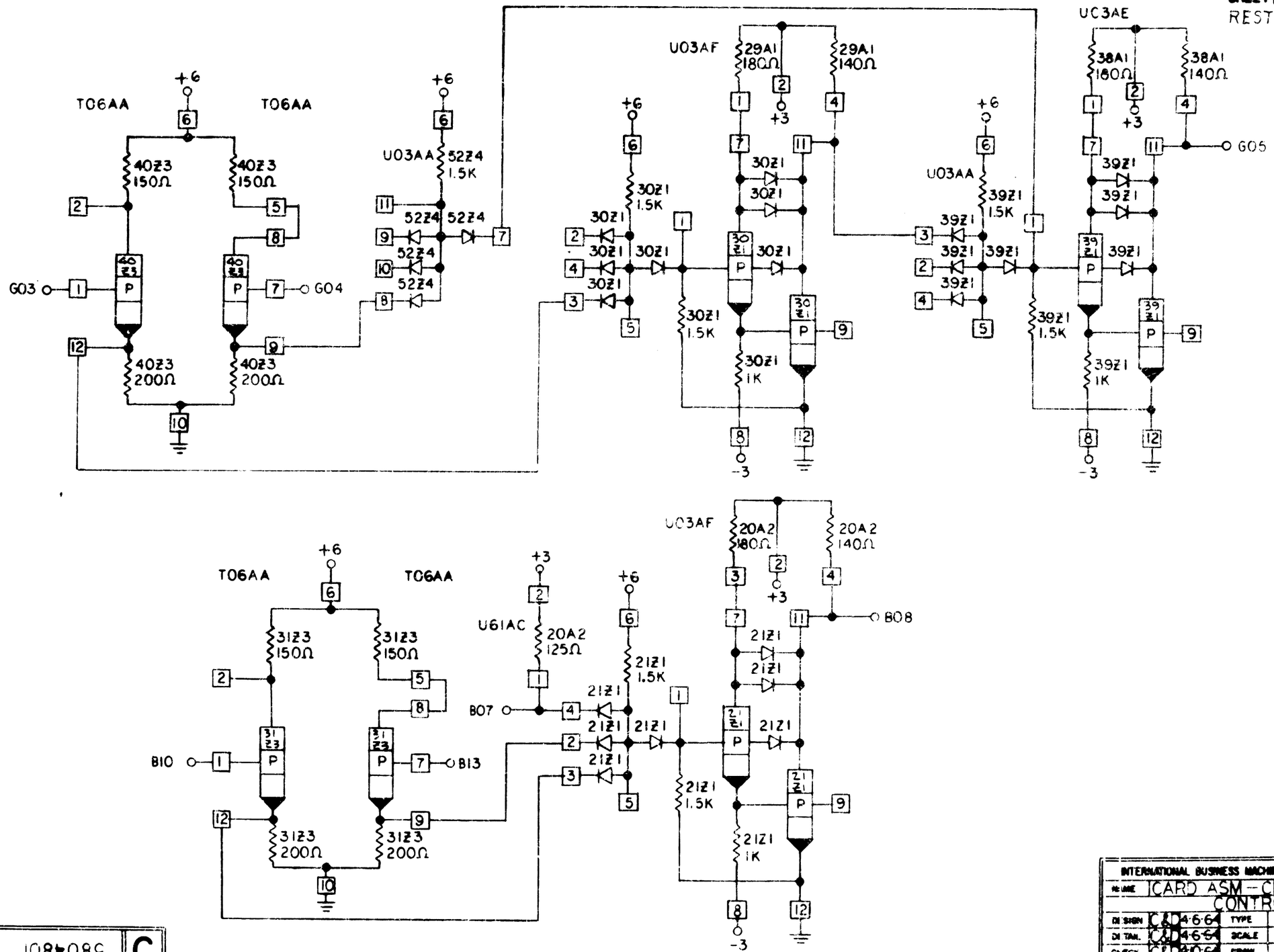

INTERNATIONAL BUSINESS MACHINES CORP			
NAME	CARD ASM – CLOCK CONTROL		
DESIGN	C.D. 4-6-64	TYPE	2362
DETAIL	C.D. 4-6-64	SCALE	NONE
CHECK	C.D. 4-10-64	DRAWN	
APPRO		CHECK	O.T. 4-22-64

5804801 C