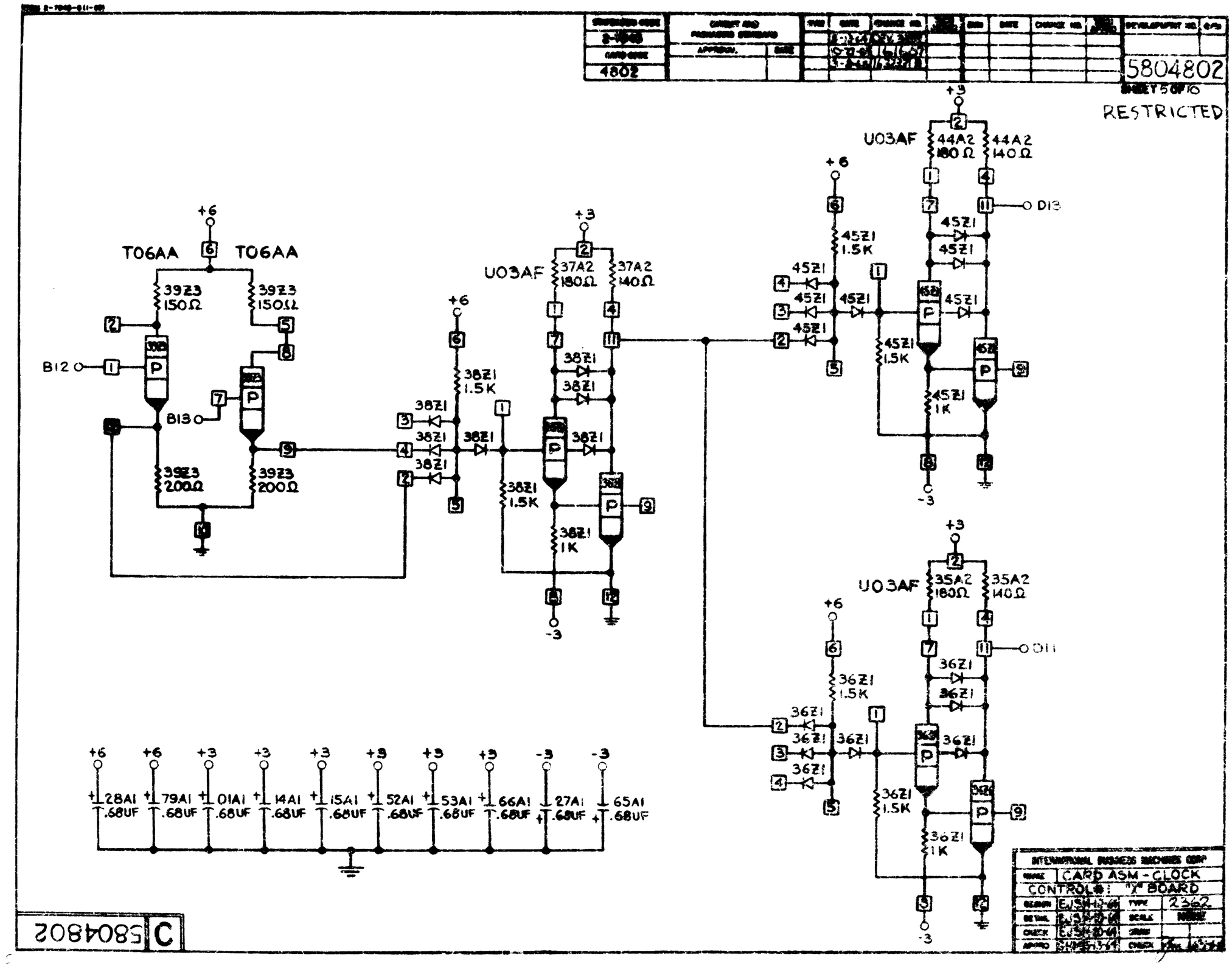
4802
5804802
SHEET 5 OF 10
RESTRICTED
T06AA
T06AA
39Z3 150Ω
39Z3 150Ω
39Z3 200Ω
39Z3 200Ω
B12
B13
U03AF
37A2 180Ω
37A2 140Ω
38Z1 1.5K
38Z1 1K
U03AF
44A2 180Ω
44A2 140Ω
45Z1 1.5K
45Z1 1K
D13
U03AF
35A2 180Ω
35A2 140Ω
36Z1 1.5K
36Z1 1K
D11
+6
+3
-3
28A1 .68UF
79A1 .68UF
01A1 .68UF
14A1 .68UF
15A1 .68UF
52A1 .68UF
53A1 .68UF
66A1 .68UF
27A1 .68UF
65A1 .68UF
INTERNATIONAL BUSINESS MACHINES CORP
CARD ASM - CLOCK
CONTROL: "X" BOARD
2362
C
5804802