STANDARDS CODE	CIRCUIT AND PACKAGING STANDARD		SYM	DATE	CHANGE NO.	TECH APPRO.	SYM	DATE	CHANGE NO.	TECH APPRO.	DEVELOPMENT NO.	Q/R
2-7046	APPROVAL	DATE		5-3-64	[illegible]							
CARD CODE				10-7-64	[illegible]						5804802	
4802				3-8-65	[illegible]							

RESTRICTED

SHEET 10 OF 10

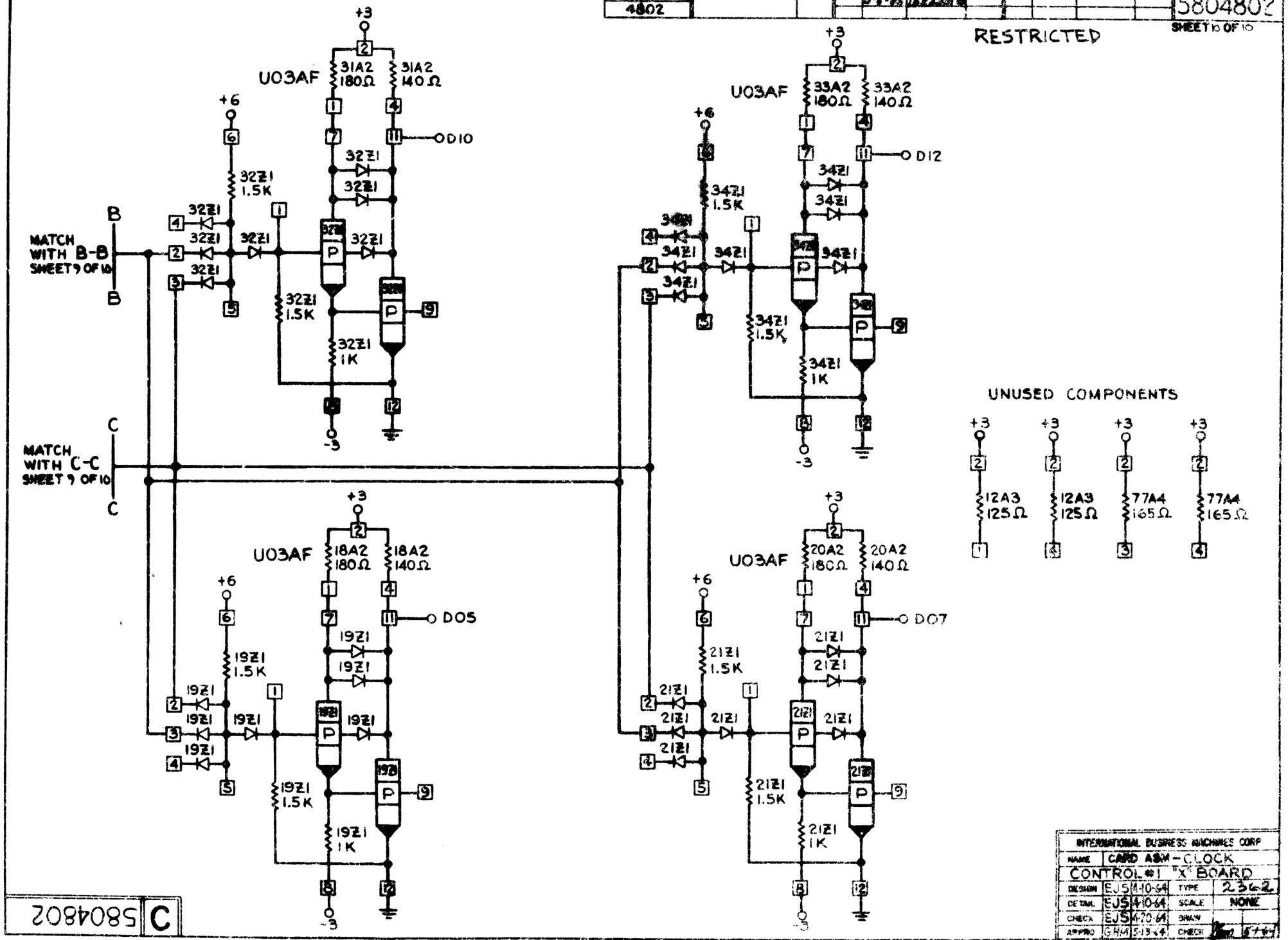

INTERNATIONAL BUSINESS MACHINES CORP			
NAME	CARD ASM - CLOCK CONTROL #1 "X" BOARD		
DESIGN	EJS 4-10-64	TYPE	2362
DETAIL	EJS 4-10-64	SCALE	NONE
CHECK	EJS 4-20-64	DRAW	
APPRO	GHM 5-13-64	CHECK	

C 5804802