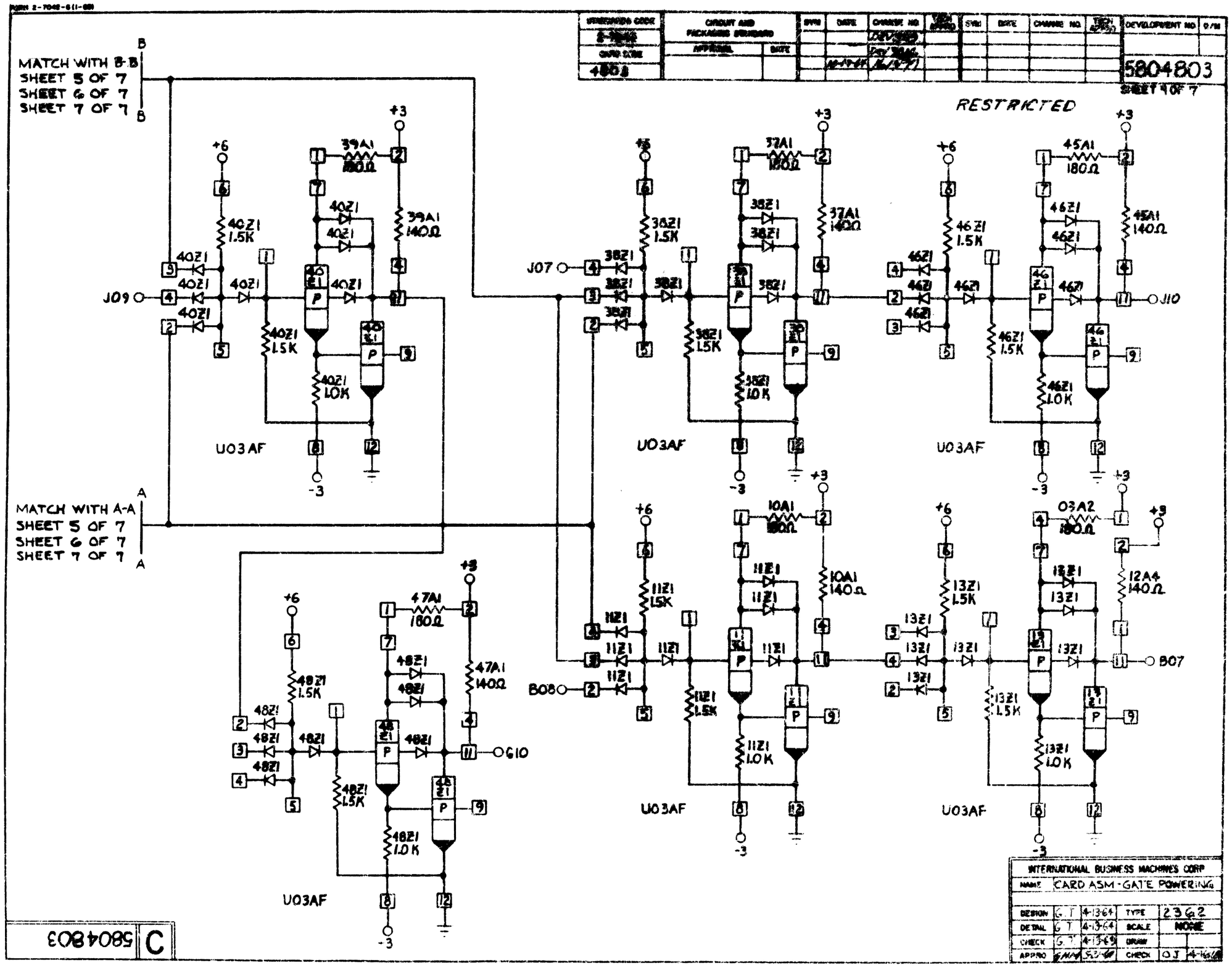
MATCH WITH B-B
SHEET 5 OF 7
SHEET 6 OF 7
SHEET 7 OF 7
MATCH WITH A-A
SHEET 5 OF 7
SHEET 6 OF 7
SHEET 7 OF 7
RESTRICTED
5804803
SHEET 4 OF 7
J09
J07
J10
B08
B07
G10
U03AF
39A1 180Ω
39A1 140Ω
40Z1 1.5K
40Z1 1.0K
37A1 180Ω
37A1 140Ω
38Z1 1.5K
38Z1 1.0K
45A1 180Ω
45A1 140Ω
46Z1 1.5K
46Z1 1.0K
10A1 180Ω
10A1 140Ω
11Z1 1.5K
11Z1 1.0K
03A2 180Ω
12A4 140Ω
13Z1 1.5K
13Z1 1.0K
47A1 180Ω
47A1 140Ω
48Z1 1.5K
48Z1 1.0K
+6
+3
-3
C
5804803
INTERNATIONAL BUSINESS MACHINES CORP
NAME CARD ASM-GATE POWERING
DESIGN G.T 4-13-64
DETAIL G.T 4-13-64
CHECK G.T 4-13-64
APPRO
TYPE 2362
SCALE NONE
DRAW
CHECK O.J 4-16-64