STANDARDS CODE	CIRCUIT AND PACKAGING STANDARD		SYM	DATE	CHANGE NO	TECH APPRO	SYM	DATE	CHANGE NO	TECH APPRO	DEVELOPMENT NO	O/N
2-7048				4-9-64	DEV.3502							
CARD CODE	APPROVAL	DATE		12/20/64	16600						5804804	
4804												

SHEET 7 OF 10

RESTRICTED

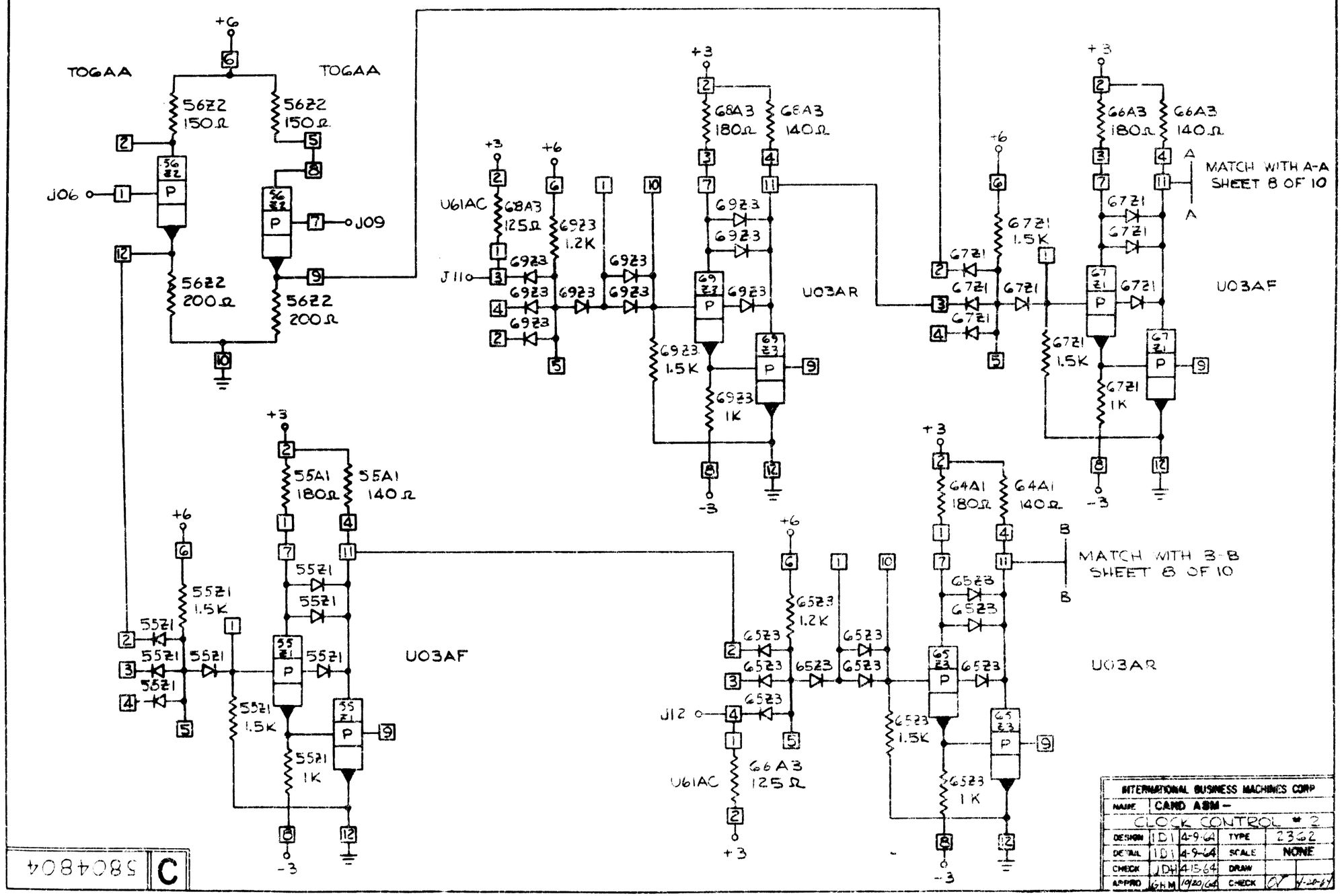

INTERNATIONAL BUSINESS MACHINES CORP					
NAME	CARD ASM – CLOCK CONTROL # 2				
DESIGN	JDJ	4-9-64	TYPE	2362	
DETAIL	JDJ	4-9-64	SCALE	NONE	
CHECK	JDH	4-15-64	DRAW		
APPRO	GHM	10/20/64	CHECK	CT	4-20-64

C 5804804