STANDARDS CODE	CIRCUIT AND PACKAGING STANDARD		SYM	DATE	CHANGE NO.	TECH APPRO	SYM	DATE	CHANGE NO.	TECH APPRO	DEVELOPMENT NO.	G/M
2-7548				4/24/62	[illegible]							
CARD CODE	APPROVAL	DATE		10/8/64	161600							
4894											5804804	

SHEET 1 OF 10

RESTRICTED

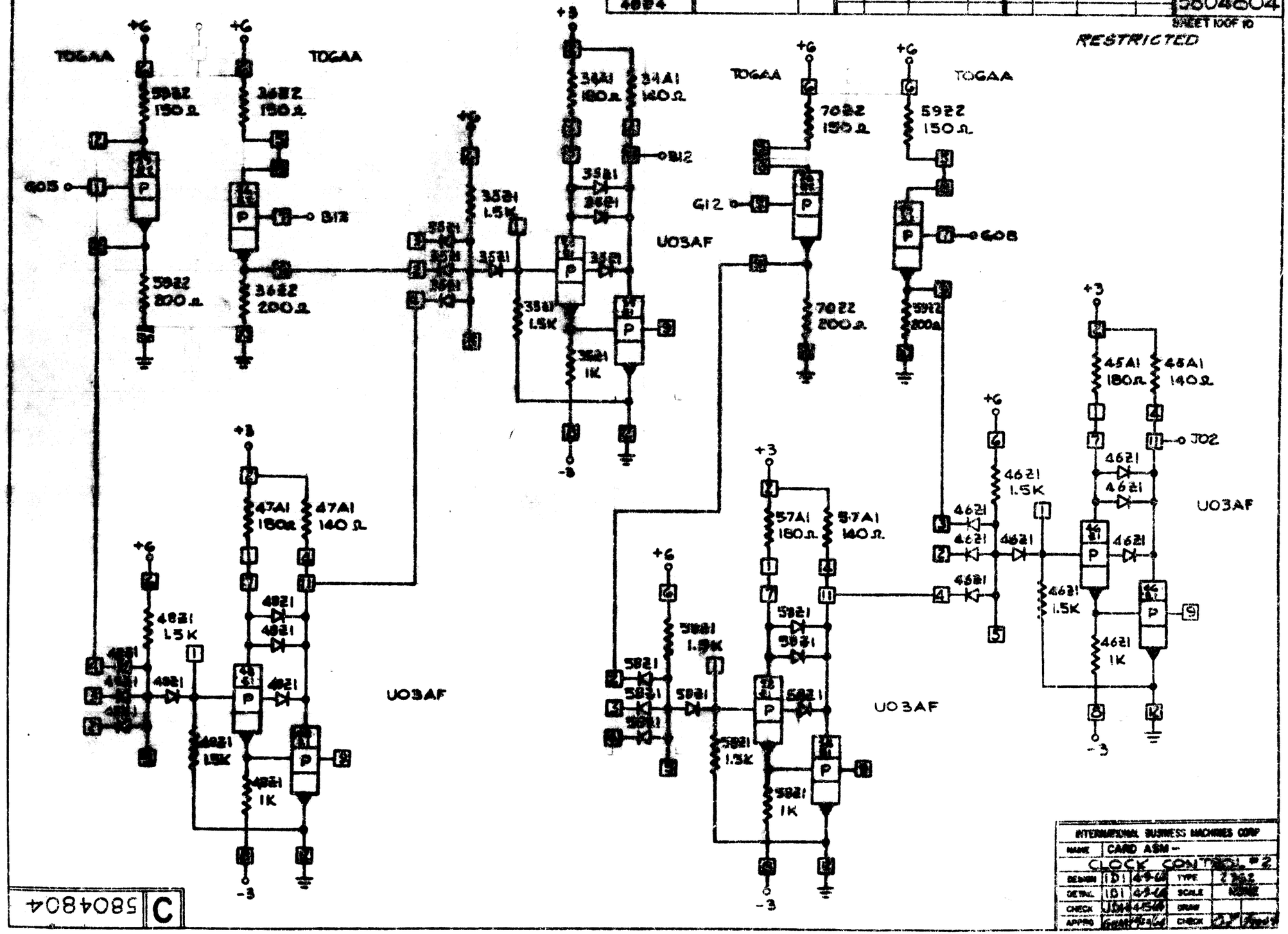

INTERNATIONAL BUSINESS MACHINES CORP				
NAME	CARD ASM — CLOCK CONTROL #2			
DESIGN	ID1	4-4-64	TYPE	[illegible]
DETAIL	ID1	4-4-64	SCALE	NONE
CHECK	[illegible]	4-5-64	DRAW	
APPRO	[illegible]	[illegible]	CHECK	[illegible]

C 5804804