FORM 2-7045-6 (8-63)

STANDARDS CODE	CIRCUIT AND PACKAGING STANDARD		SYM	DATE	CHANGE NO	TECH APPRO	SYM	DATE	CHANGE NO	TECH APPRO	DEVELOPMENT NO	D.M
2-7045				20CT66	68753 B							
CARD CODE	APPROVAL	DATE		00CT66	68754 C							
4806	G. H. M.										5804806	

SHEET 3 OF 6

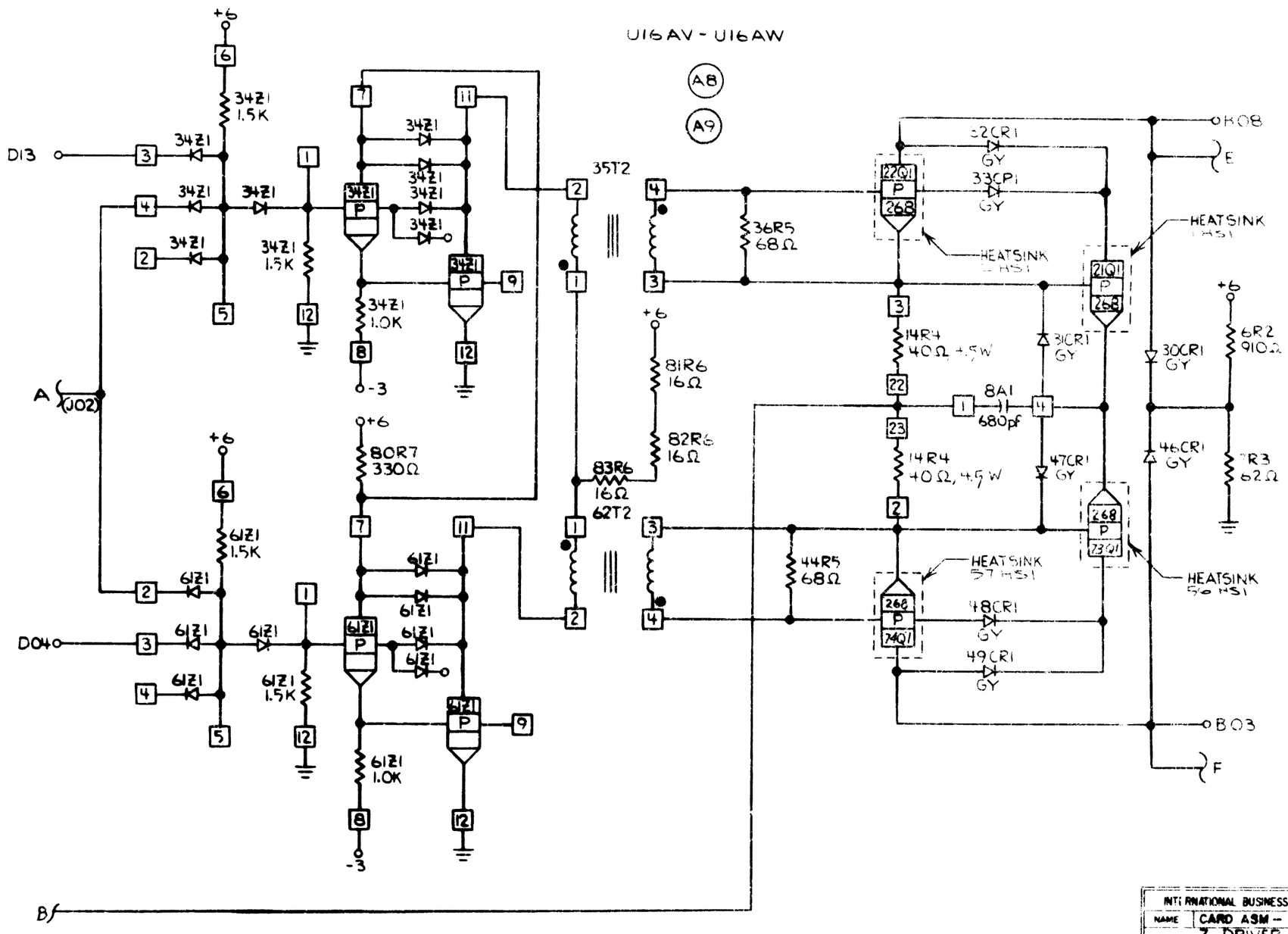

INTERNATIONAL BUSINESS MACHINES CORP					
NAME	CARD ASM — Z DRIVER				
DESIGN	TWN	25SEP66	TYPE	2365	
DETAIL	TWN	25SEP66	SCALE	NONE	
CHECK	RPV	25SEP66	DRAWN	CDA	30CT66
APPRO	GHM	25SEP66	CHECK		

5804806 C