STANDARDS CODE	CIRCUIT AND PACKAGING STANDARD		SYM	DATE	CHANGE NO	TECH APPRO	SYM	DATE	CHANGE NO	TECH APPRO	DEVELOPMENT NO	G/M
2-7046				6-12-64	160504							
CARD CODE	APPROVAL	DATE		1-13-65	162266						5804811	
4811												

RESTRICTED

SHEET 5 OF 6

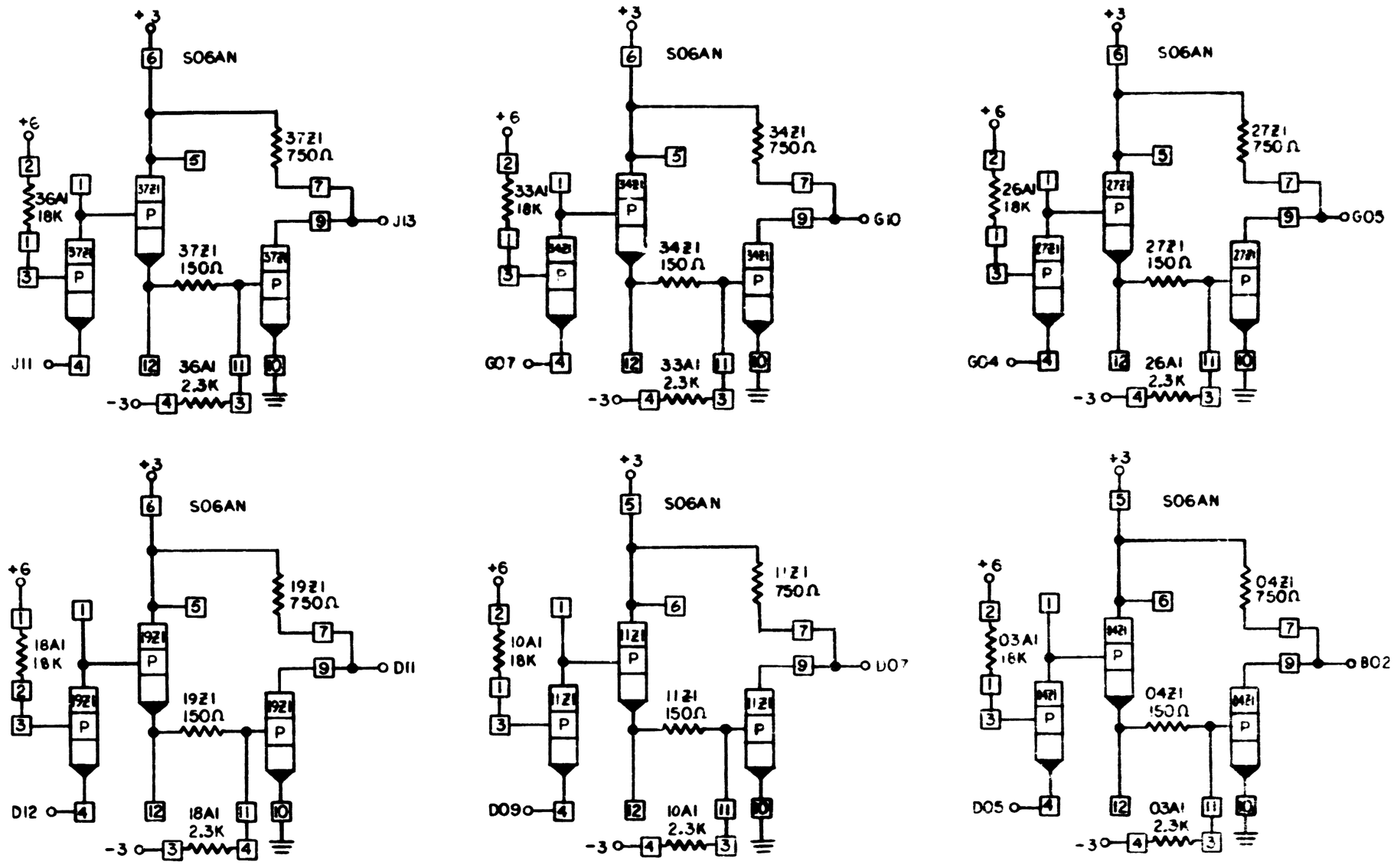

INTERNATIONAL BUSINESS MACHINES CORP			
NAME	CARD ASM - DATA		
	BIT POWERING		
DESIGN	C&DS 1264	TYPE	M9
DETAIL	C&DS 1264	SCALE	NONE
CHECK	C&DS 1364	DRAW	
APPRO	6-4-64	CHECK	REF 5 13-64

C 5804811