| SPECIFIED CODE | CIRCUIT AND PACKAGING STANDARD | | SYM | DATE | CHANGE NO. | | SYM | DATE | CHANGE NO. | | DEVELOPMENT NO. | S/M |
|---|---|---|---|---|---|---|---|---|---|---|---|---|
| 2-7048 | | | | 5-14-64 | DEV. 3146 | | | | | | S116085 | |
| CARD CODE | APPROVAL | DATE | | 10-22-64 | 161599 | | | | | | | |
| 4816 | | | | 3-11-65 | 163551 | | | | | | 5804816 | |

SHEET 5 OF 10

RESTRICTED

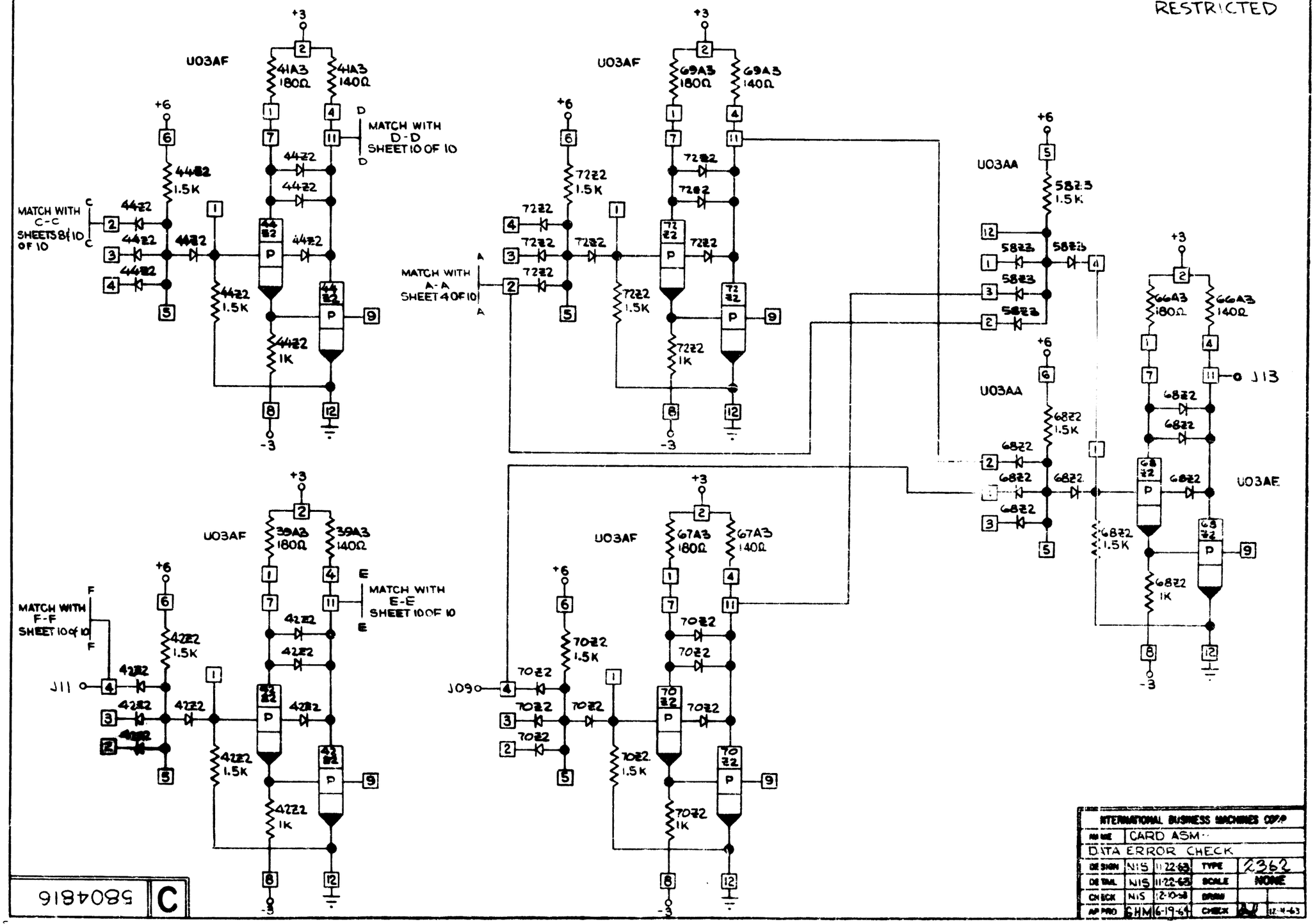


| INTERNATIONAL BUSINESS MACHINES CORP. | | | | |
|---|---|---|---|---|
| NAME | CARD ASM | | | |
| DATA ERROR CHECK | | | | |
| DESIGN | NIS | 11-22-63 | TYPE | 2362 |
| DETAIL | NIS | 11-22-63 | SCALE | NONE |
| CHECK | NIS | 12-10-63 | DRAW | |
| APPRO | GHM | 6-19-64 | CHECK | 12-4-63 |

5804816 C