STANDARDS CODE	CIRCUIT REF / PACKAGING STANDARD	SYM	DATE	CHANGE NO.	SYM	DATE	CHANGE NO.	DEVELOPMENT NO.	B/M
2-7045	APPROVAL / DATE		5-14-64	DEK 3146				5116085	
CARD CODE			10-22-64	161599					
4816			3-11-65	163551				5804816	

SHEET 6 OF 10

RESTRICTED

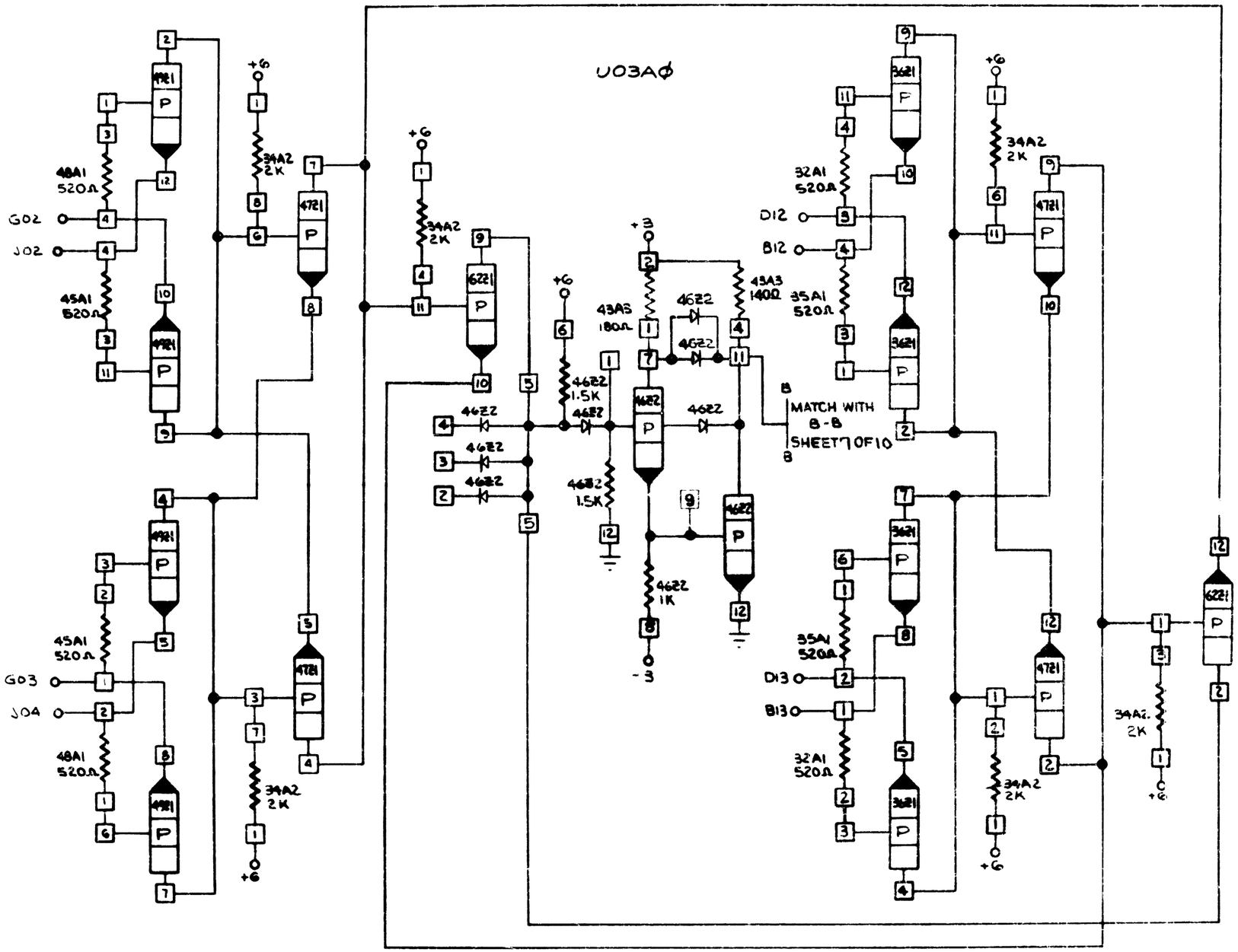

INTERNATIONAL BUSINESS MACHINES CORP				
NAME	CARD ASM- DATA ERROR CHECK			
DESIGN	NIS	1-22-63	TYPE	2362
DETAIL	NIS	1-22-63	SCALE	NONE
CHECK	NIS	1-10-63	DRAW	
APPROV	GNM	1-9-63	CHECK	

C 5804816