STANDARDS CODE	CURRENT AND PREVIOUS STANDARD	SYM	DATE	CHANGE NO.	TECH APPROV	SYM	DATE	CHANGE NO.	TECH APPROV	DEVELOPMENT NO	G/B
2-7046	APPROVAL DATE		5-14-64	DEV 3146						5116085	
CARD CODE			10-22-64	161599							
4816			3-11-65	163551						5804816	

SHEET 7 OF 10

RESTRICTED

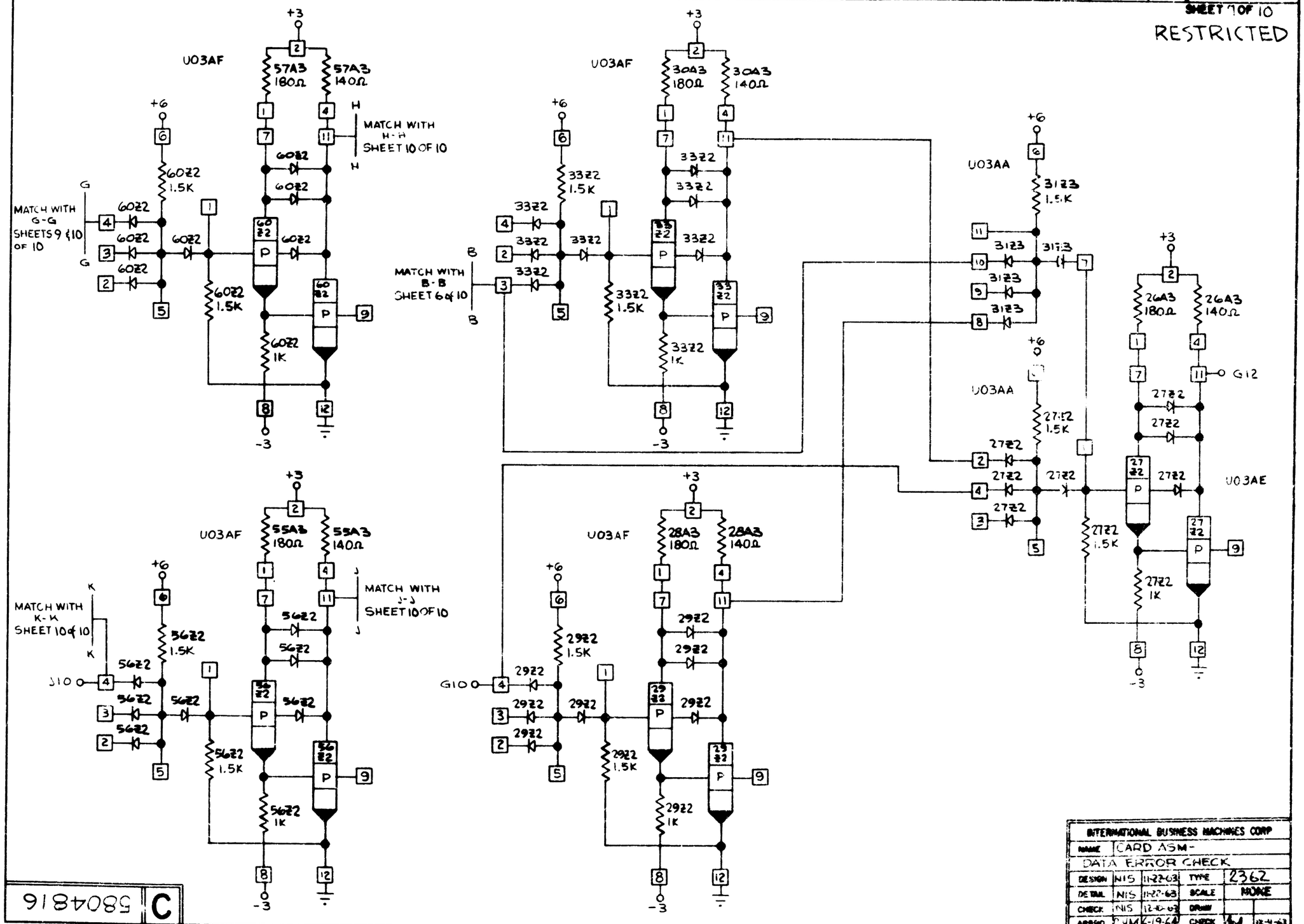

INTERNATIONAL BUSINESS MACHINES CORP				
NAME	CARD ASM- DATA ERROR CHECK			
DESIGN	NIS	11-27-63	TYPE	2362
DETAIL	NIS	11-27-63	SCALE	NONE
CHECK	NIS	12-10-63	DRAW	
APPRO	GHM	6-19-64	CHECK	12-4-63

C 5804816