FORM 2-7048-6 (1-63)

STANDARDS CODE	CIRCUIT AND PACKAGING STANDARD		SYM	DATE	CHANGE NO		SYM	DATE	CHANGE NO		DEVELOPMENT NO	S/M
2-7048	APPROVAL	DATE		5-14-64	DEV 3146						S116085	
CARD CODE				10-22-64	161599							
4816				3-11-65	163551						5804816	

SHEET 9 OF 10

RESTRICTED

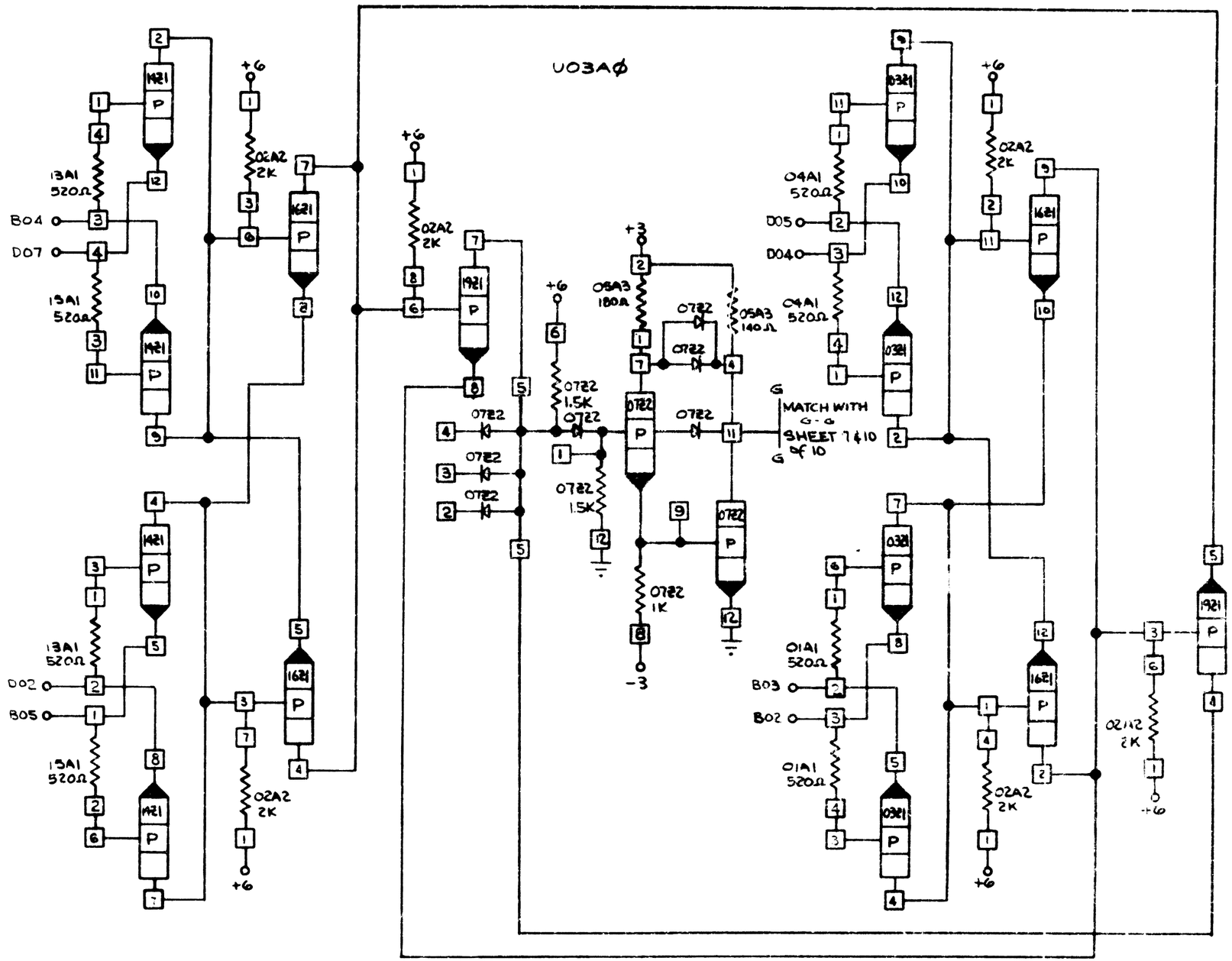

INTERNATIONAL BUSINESS MACHINES CORP				
NAME	CARD ASM-			
DATA ERROR CHECK				
DESIGN	NIS	11-23-63	TYPE	2362
DETAIL	NIS	11-23-63	SCALE	NONE
CHECK	NIS	12-10-63	DR-RP	
APPROD	GHM	6-19-64	CHECK	

C 5804816