STANDARDS CODE	CIRCUIT AND PACKAGING STANDARD		SYM	DATE	CHANGE NO.	TECH APPRO	SYM	DATE	CHANGE NO.	TECH APPRO	DEVELOPMENT NO.	Q/M
2-7045	APPROVAL	DATE		5-14-64	DEK 3146						S116085	
CARD CODE				10-22-64	161597							
4816				3-11-65	163551						5804816	

SHEET 10 OF 10

RESTRICTED

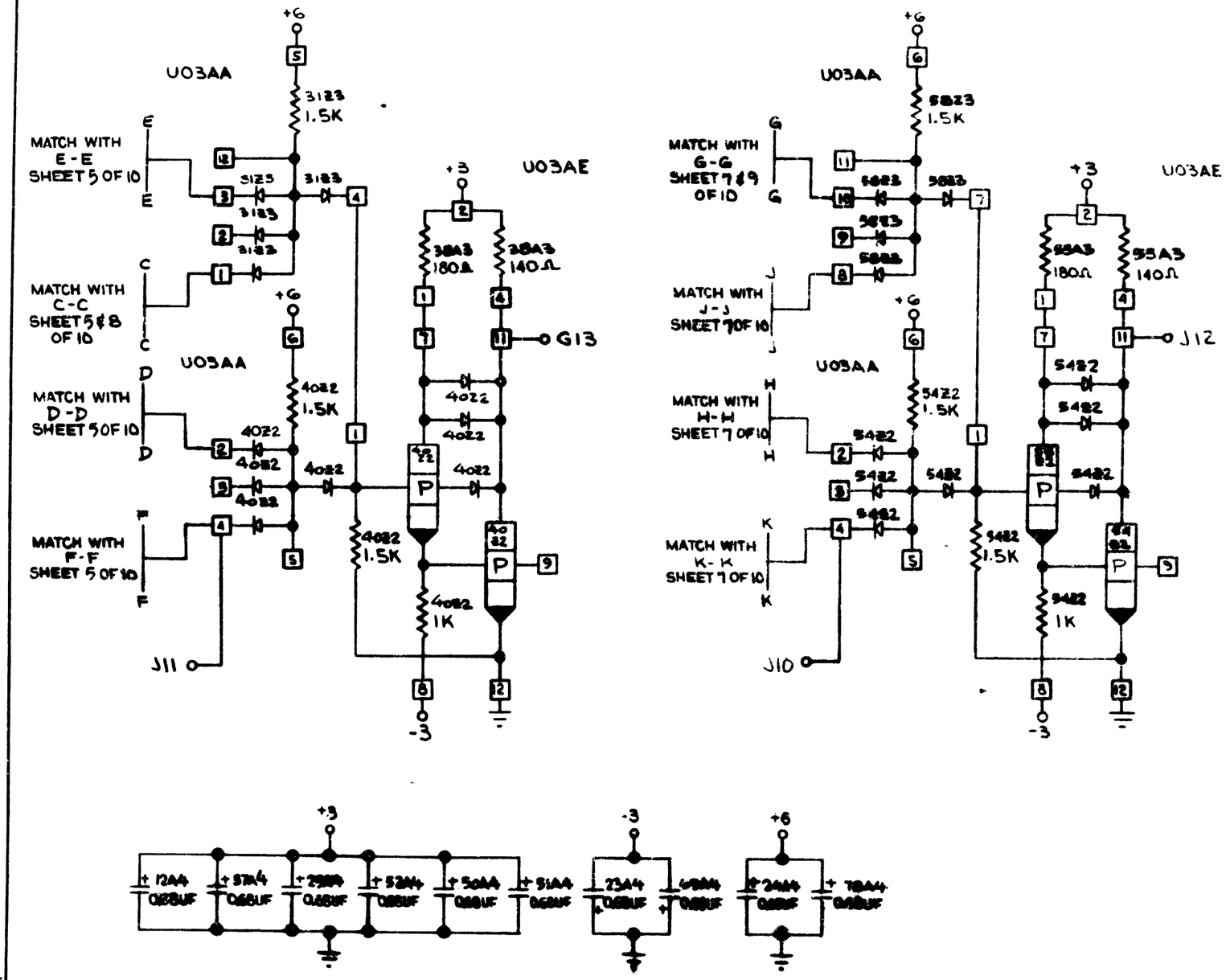

INTERNATIONAL BUSINESS MACHINES CORP				
NAME	CARD ASM – DATA			
ERROR CHECK				
DESIGN	NIS	11-22-63	TYPE	2362
DETAIL	NIS	11-22-63	SCALE	NONE
CHECK	NIS	11-10-63	DRAW	
APPRO	GHM	6-19-64	CHIEF	12-11-63

C 5804816