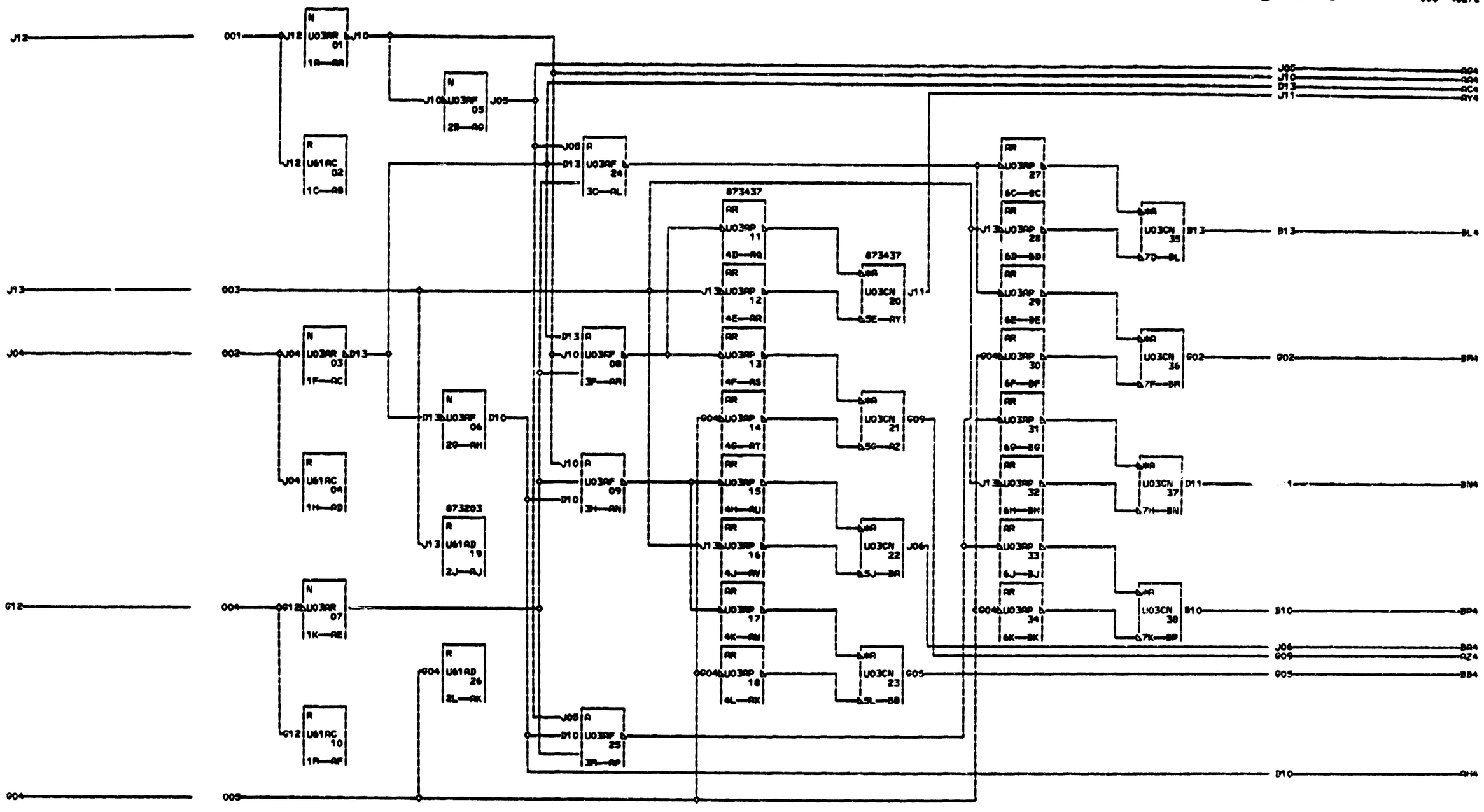

2 DECODE SENSE STROBE A	
DATE 05-05-65 RACH. ASSEMBLY	4 8 2 7 2
LOG 195 FRAME 06	
CD PG 2 OF 2 P.N. 5804827	000
IBM CORP. PD BLK. BQ	

4
8
2
7
2
000