STANDARDS CODE	CIRCUIT AND PACKAGING STANDARD		SYM	DATE	CHANGE NO.	TECH APPROV	SYM	DATE	CHANGE NO.	TECH APPROV	DEVELOPMENT NO.	G/M
2-70-46				5/10/65								
CARD CODE	APPROVAL	DATE									5804827	
4827	GHM	1-4-65										

RESTRICTED

SHEET 5 OF 12

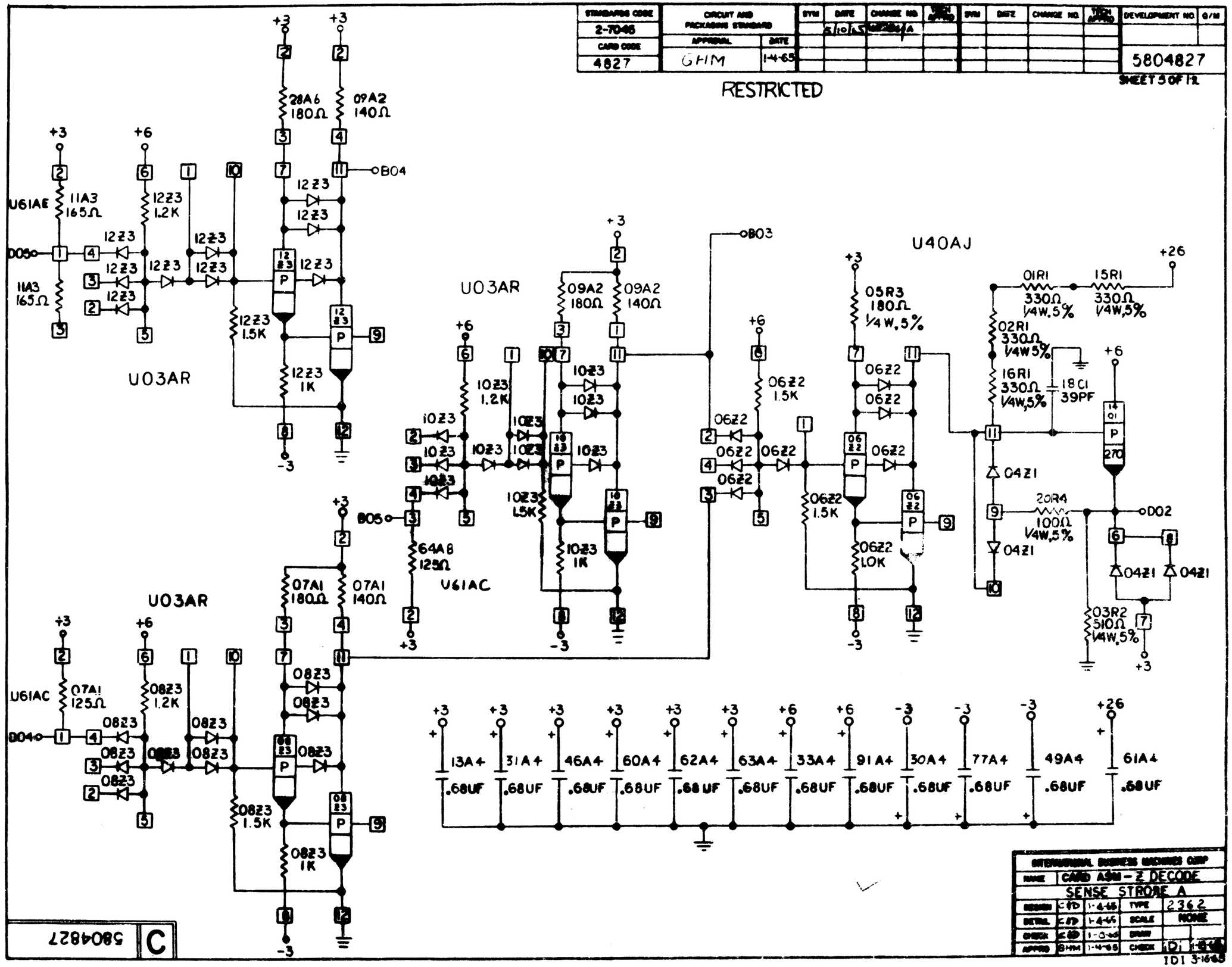

INTERNATIONAL BUSINESS MACHINES CORP				
NAME	CARD ASM – Z DECODE			
	SENSE STROBE A			
DESIGN	CFD	1-4-65	TYPE	2362
DETAIL	CFD	1-4-65	SCALE	NONE
CHECK	CFD	1-8-65	DRAW	
APPRO	GHM	1-14-65	CHECK	

5804827 C

TD1 3-1665