STANDARDS CODE	CIRCUIT AND PACKAGING STANDARD		SYM	DATE	CHANGE NO	TECH APPRO	SYM	DATE	CHANGE NO	TECH APPRO	DEVELOPMENT NO	Q/M
2-7046				5/10/65	622867A							
CARD CODE	APPROVAL	DATE										
4827	GHM	1-4-65									5804827	

SHEET 6 OF 12

RESTRICTED

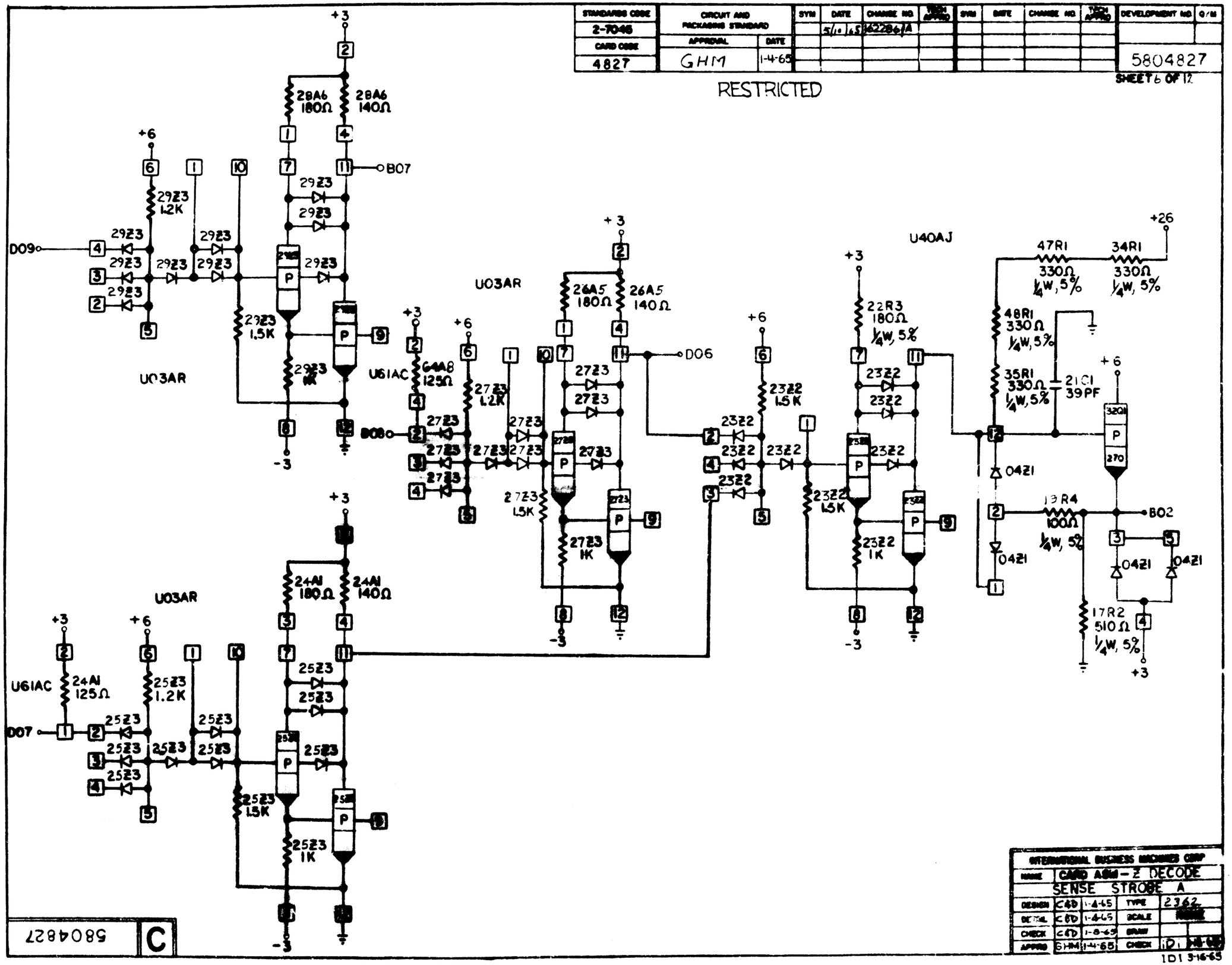

INTERNATIONAL BUSINESS MACHINES CORP				
NAME	CARD ASM-Z DECODE SENSE STROBE A			
DESIGN	C&D	1-4-65	TYPE	2362
DETAIL	C&D	1-4-65	SCALE	
CHECK	C&D	1-8-65	DRAW	
APPRO	GHM	1-4-65	CHECK	ID1 3-16-65

C

5804827