STANDARDS CODE	CIRCUIT AND PACKAGING STANDARD		SYM	DATE	CHANGE NO	TECH APPRO	SYM	DATE	CHANGE NO	TECH APPRO	DEVELOPMENT NO	O/M
2-7045				2-12-65	162287							
CARD CODE	APPROVAL	DATE									5804828	
4828	GHM	1-27-65										

SHEET 5 OF 12

RESTRICTED

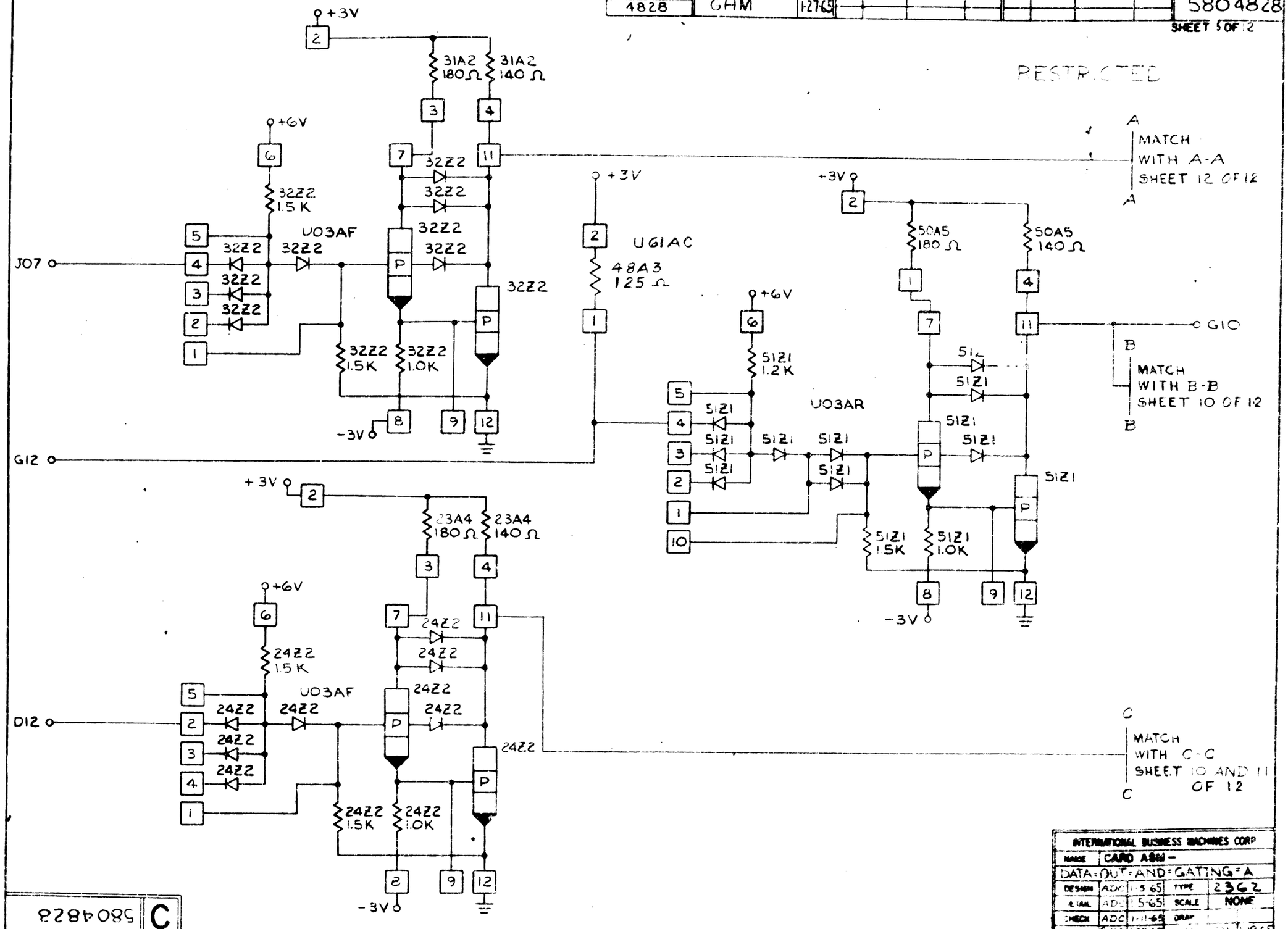

INTERNATIONAL BUSINESS MACHINES CORP				
NAME	CARD ABM -			
DATA=OUT=AND=GATING=A				
DESIGN	ADC	1-5-65	TYPE	2362
LAYOUT	ADC	1-5-65	SCALE	NONE
CHECK	ADC	1-11-65	DRAW	
APPRO	GHM	1-27-65		1-18-65

C 5804828