STANDARD CODE	CIRCUIT AND PACKAGING STANDARD		SYM	DATE	CHANGE NO	SYM	DATE	CHANGE NO	DEVELOPMENT NO	0/M
2-7048				2-12-65	1622457					
CARD CODE	APPROVAL	DATE							5804828	
4828	GHM	12-7-65							SHEET 11 OF 12	

RESTRICTED

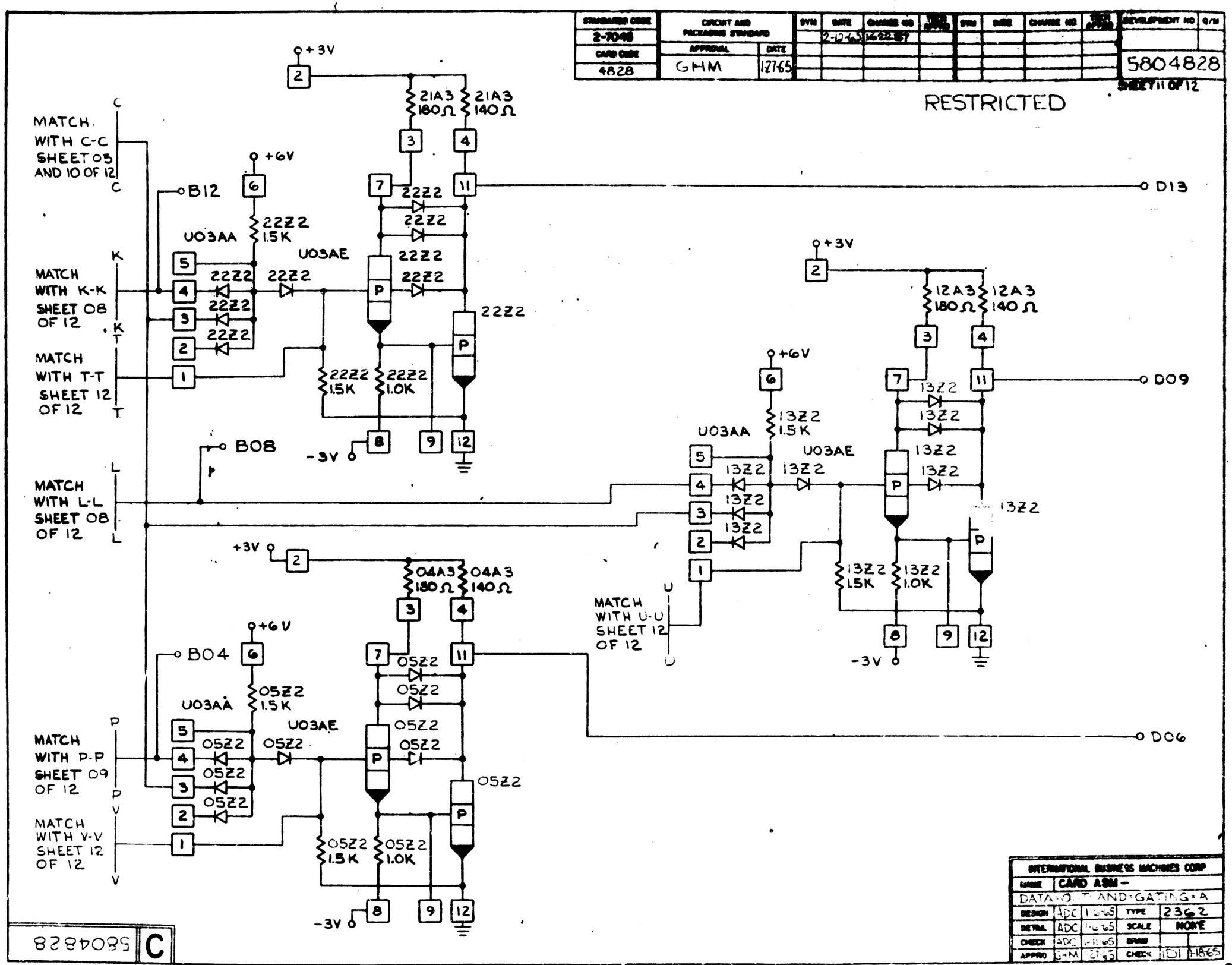

INTERNATIONAL BUSINESS MACHINES CORP				
NAME	CARD ASM – DATA OUT AND GATING A			
DESIGN	ADC	11-6-65	TYPE	2362
DETAIL	ADC	11-6-65	SCALE	NONE
CHECK	ADC	11-11-65	DRAW	
APPRO	GHM	12-7-65	CHECK	11D1 11-8-65

5804828 C