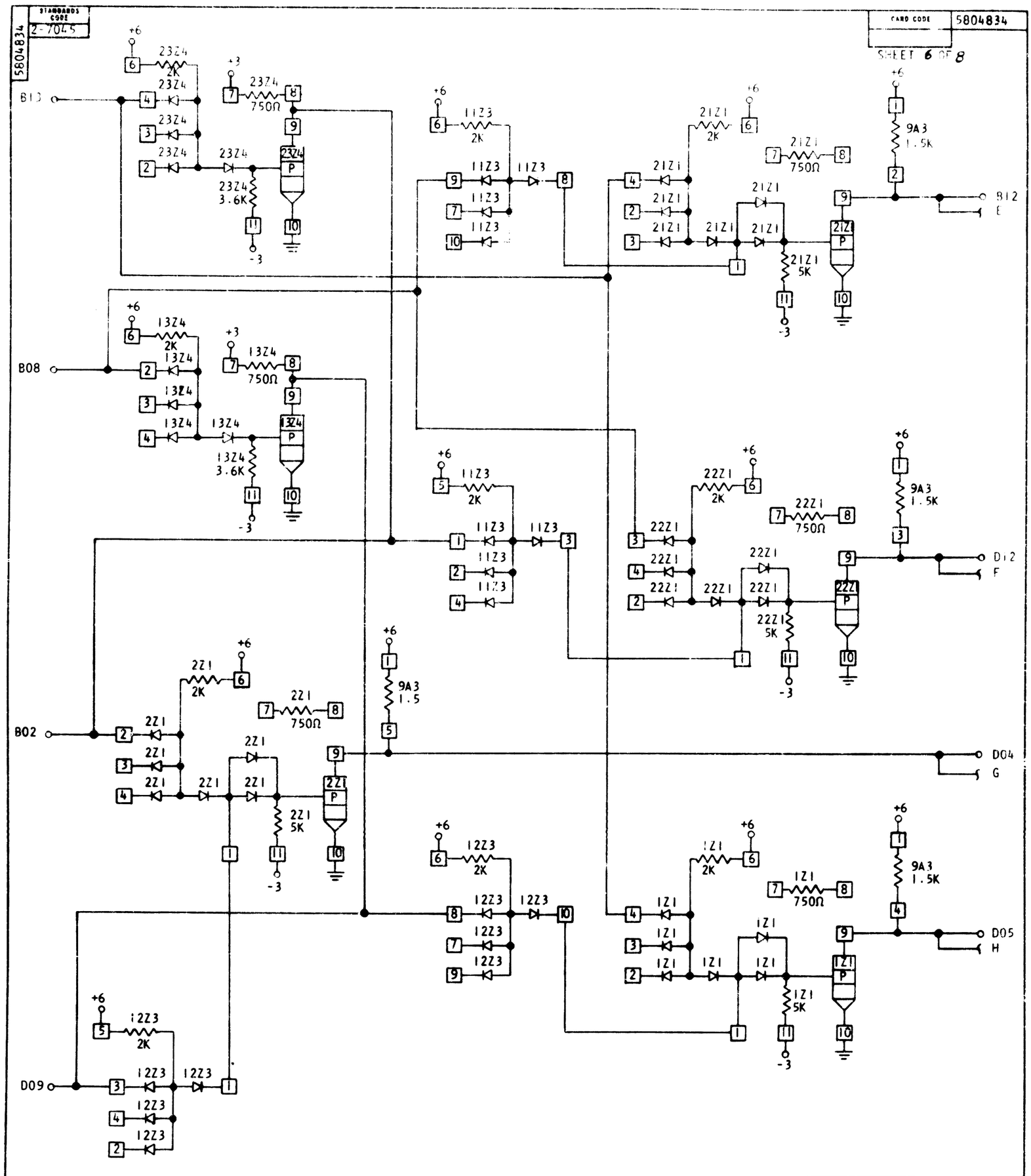

CIRCUIT AND PACKAGING STANDARD	
APPROVAL	DATE

INTERNATIONAL BUSINESS MACHINES CORP.					DATE	CHANGE NO.	APPROVAL	DATE	CHANGE NO.	APPROVAL	DEVELOPMENT NO.
NAME	M2 GATE DECODE "B" MODEL				7-29-64	DEV 3575					
DESIGN	JMR	12-5-63	MODEL		9-29-64	161006					
DETAIL	JMP	12-5-63	SCALE	NONE							
CHECK	RLC	12-9-63	DRAW	VMD 7-31-64							
APPRO	L. M.	12-12-63	CHECK	RW 9-29-64							

5804834

C