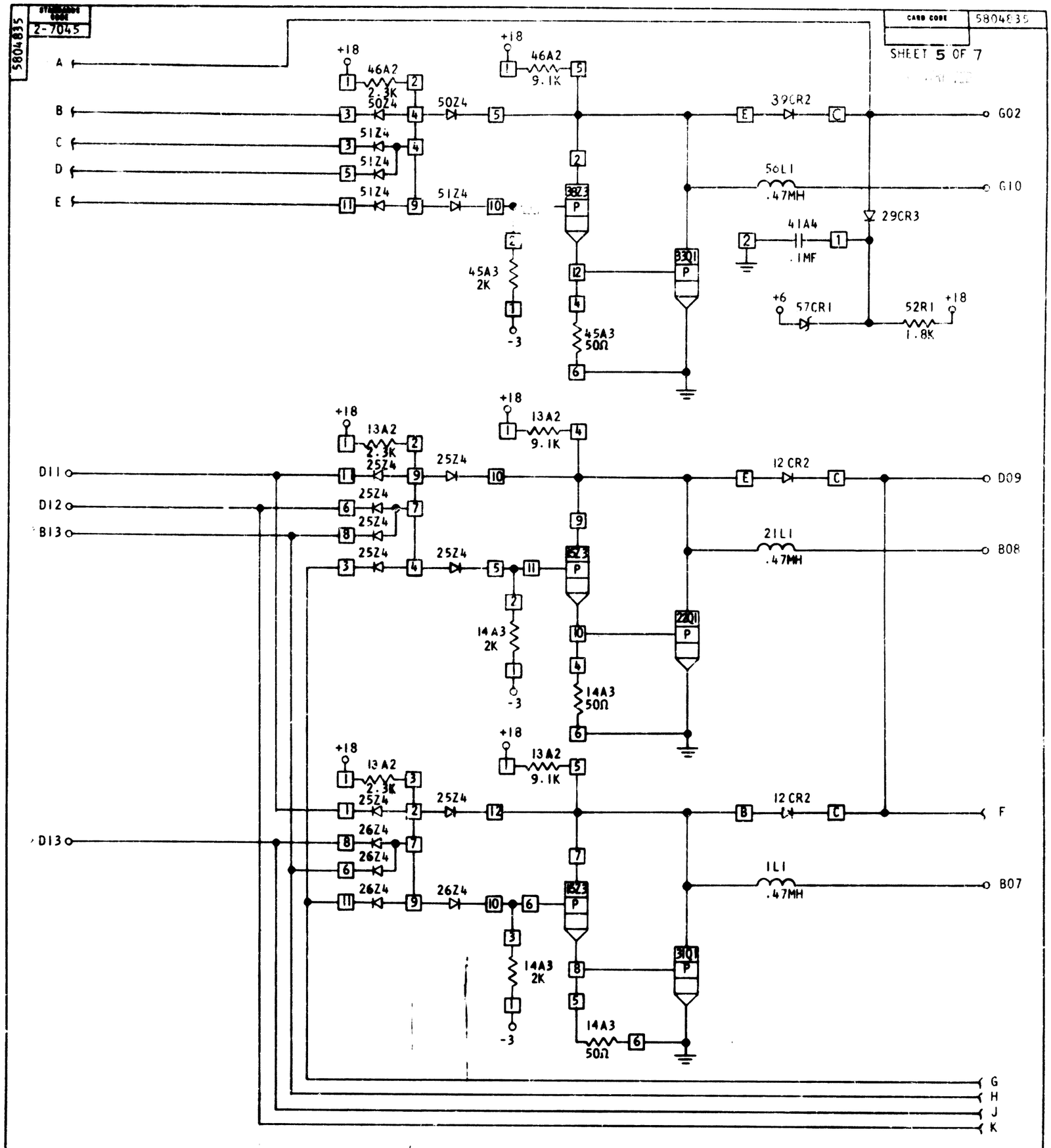
5804835
2-7045
CARD CODE 5804835
SHEET 5 OF 7
A
B
C
D
E
+18
46A2
2.3K
50Z4
51Z4
46A2
9.1K
39CR2
G02
56L1
.47MH
G10
29CR3
41A4
.1MF
38Z3
P
33Q1
45A3
2K
-3
45A3
50Ω
+6
57CR1
52R1
1.8K
+18
D11
D12
B13
13A2
2.3K
25Z4
13A2
9.1K
12 CR2
D09
21L1
.47MH
B08
14A3
2K
14A3
50Ω
D13
26Z4
F
1L1
.47MH
B07
G
H
J
K
CIRCUIT AND PACKAGING STANDARD
APPROVAL
DATE
CARD ASM-M2 DRIVER
DATE
CHANGE NO.
APPROVAL
DEVELOPMENT NO.
7-29-64
DEV3576
11-9-64
161016
NONE
5804835
C