STANDARDS CODE 2-7045

5804835

CARD CODE 5804835

SHEET 6 OF 7

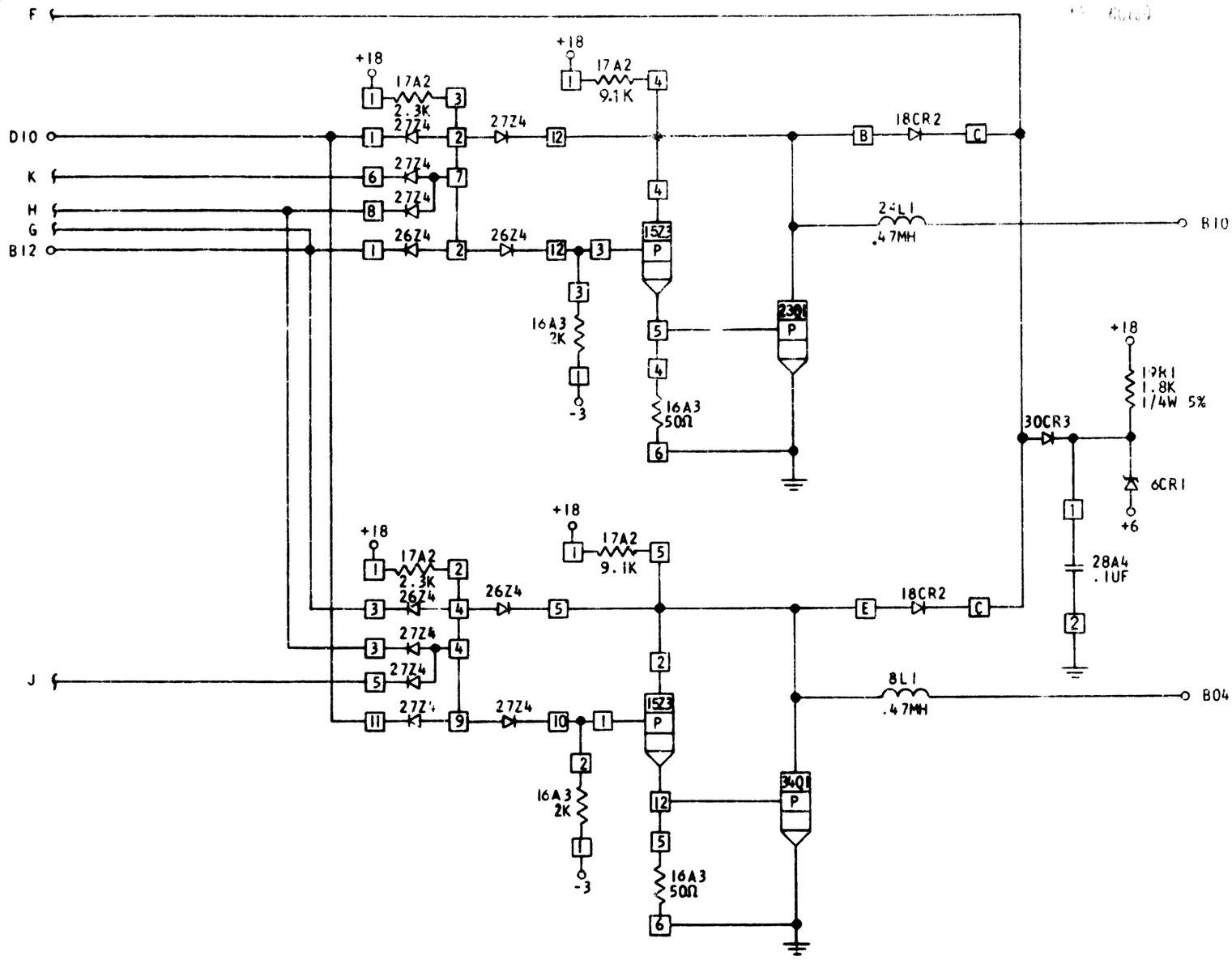

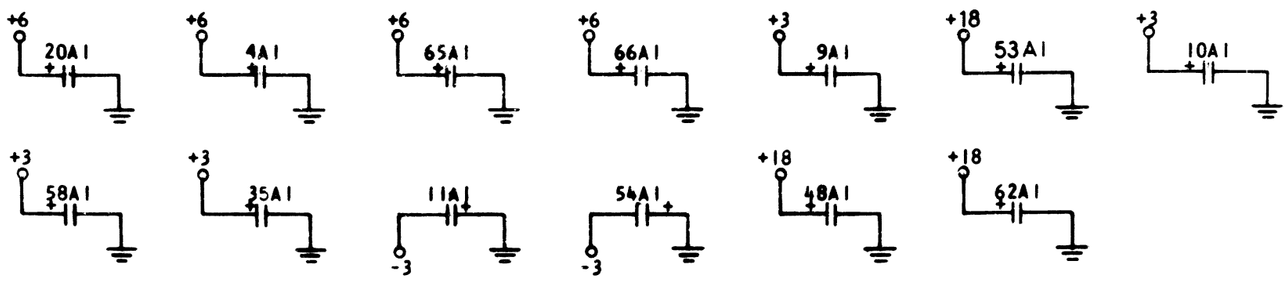

CIRCUIT AND PACKAGING STANDARD	
APPROVAL	DATE

INTERNATIONAL BUSINESS MACHINES CORP.	DATE	CHANGE NO.	APPROVAL	DATE	CHANGE NO.	APPROVAL	DEVELOPMENT NO.
NAME CARD ASM-M2 DRIVER DECODE	7-29-64	DEV 3576					
DRAWN RN 7-24-64 MODEL	11-9-64	161016					
DETAIL RN 7-24-64 SCALE NONE							
CHECK EB 7-31-64 DRAWN WEDNESDAY 1-64							
APPRO CHECK							

5804835

C