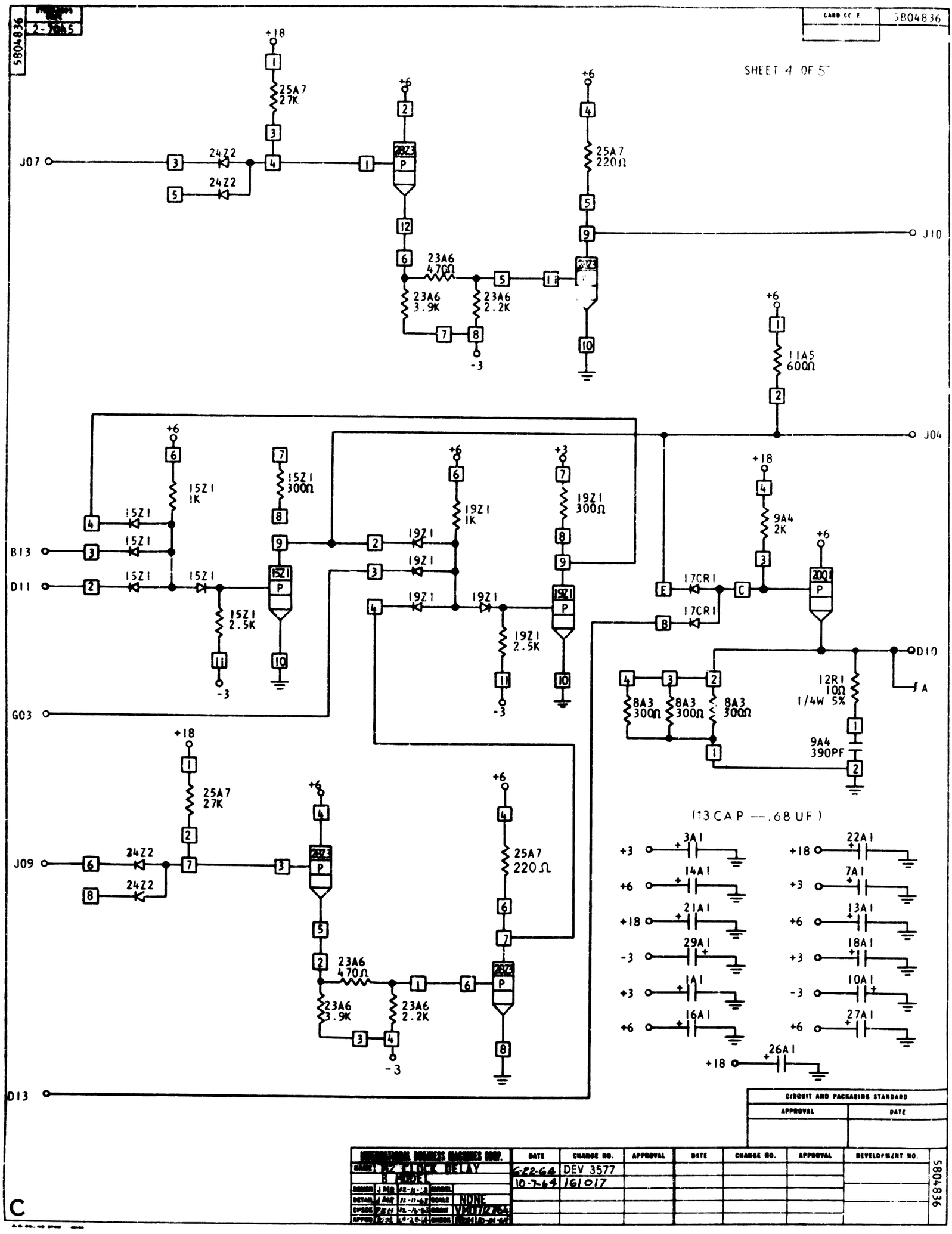

CIRCUIT AND PACKAGING STANDARD	
APPROVAL	DATE

INTERNATIONAL BUSINESS MACHINES CORP.

TITLE	12 CLOCK DELAY B MODEL			DATE	CHANGE NO.	APPROVAL	DATE	CHANGE NO.	APPROVAL	DEVELOPMENT NO.	5804836
DESIGN	J. MA	12-11-63	MODEL	6-22-64	DEV 3577						
DETAIL	J. ROE	12-11-63	SCALE NONE	10-7-64	161017						
CHECK		12-16-63	DRAWN								
APPROV		12-26-63	CHANGE								

C