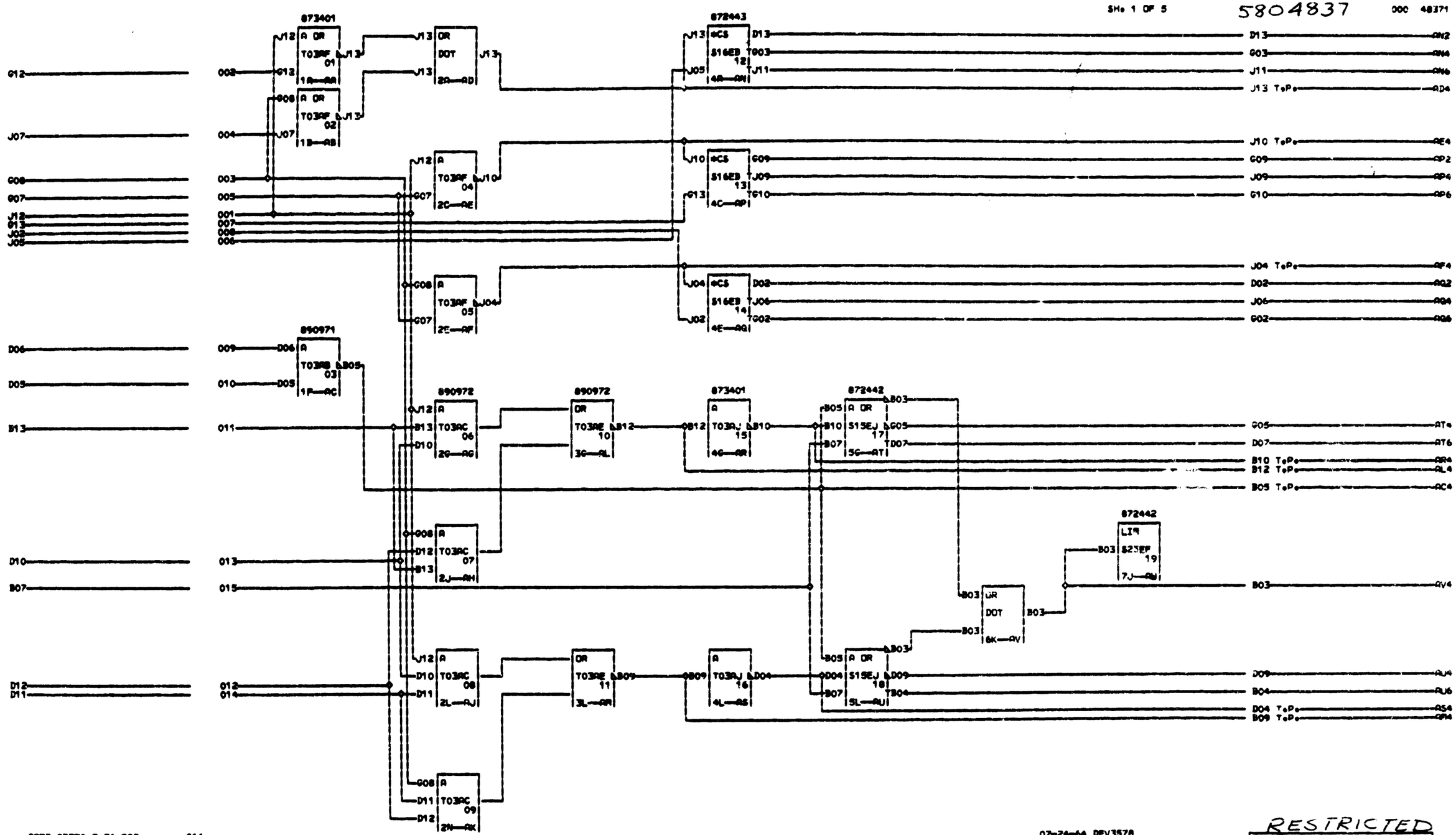

CARD SIZEO 2-36 PAC S16
VOLTAGE PINS
4 +6V0B110G11 +3V0D030J03
8 -3V0B060G06 GND0D080J08
3 +18OG04 +40OB02
7 SPECIAL RESTRICTED
1 *TEST CARD TO ENG SPEC 872449

000

07-24-64 DEV3578
09-08-64 161008
01-21-65 162826

RESTRICTED

GATE TERMINATOR + LOCAL DECODE
DATE 01-21-65 PACHe ASSEMBLY
LOG 0181 FFQRE
J C ROGERS PeNe 5804837
IBM CORPe EM BLKe AX

4 8 3 7 1 000