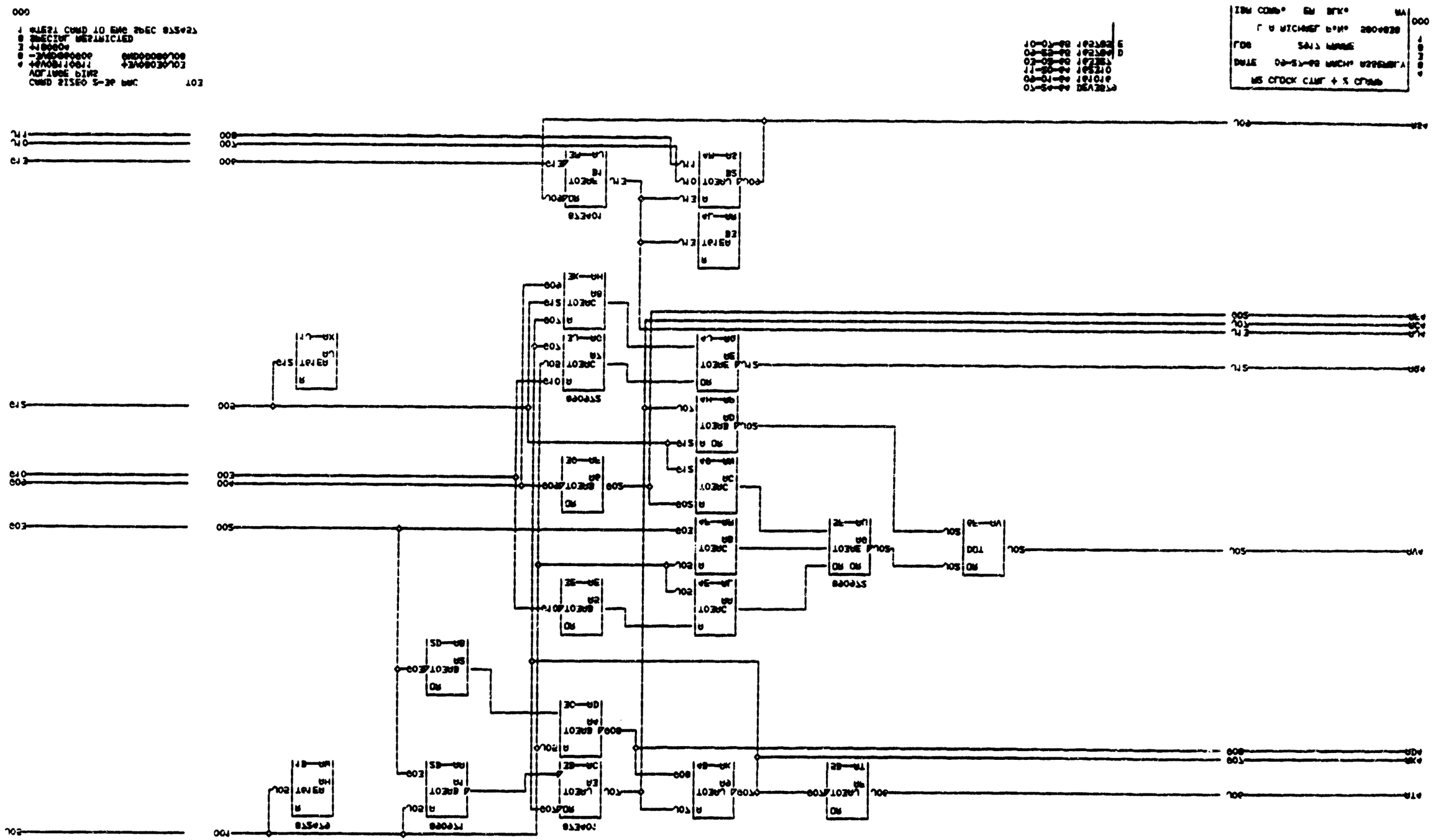

THIS DWG HAS BEEN HAND CHECKED AGAINST THE MINIMUM SAM DLA SIMT