STANDARD CODE 2-7045

5804839

CARD CODE 5804839

RESTRICTED

SHEET 5 OF 8

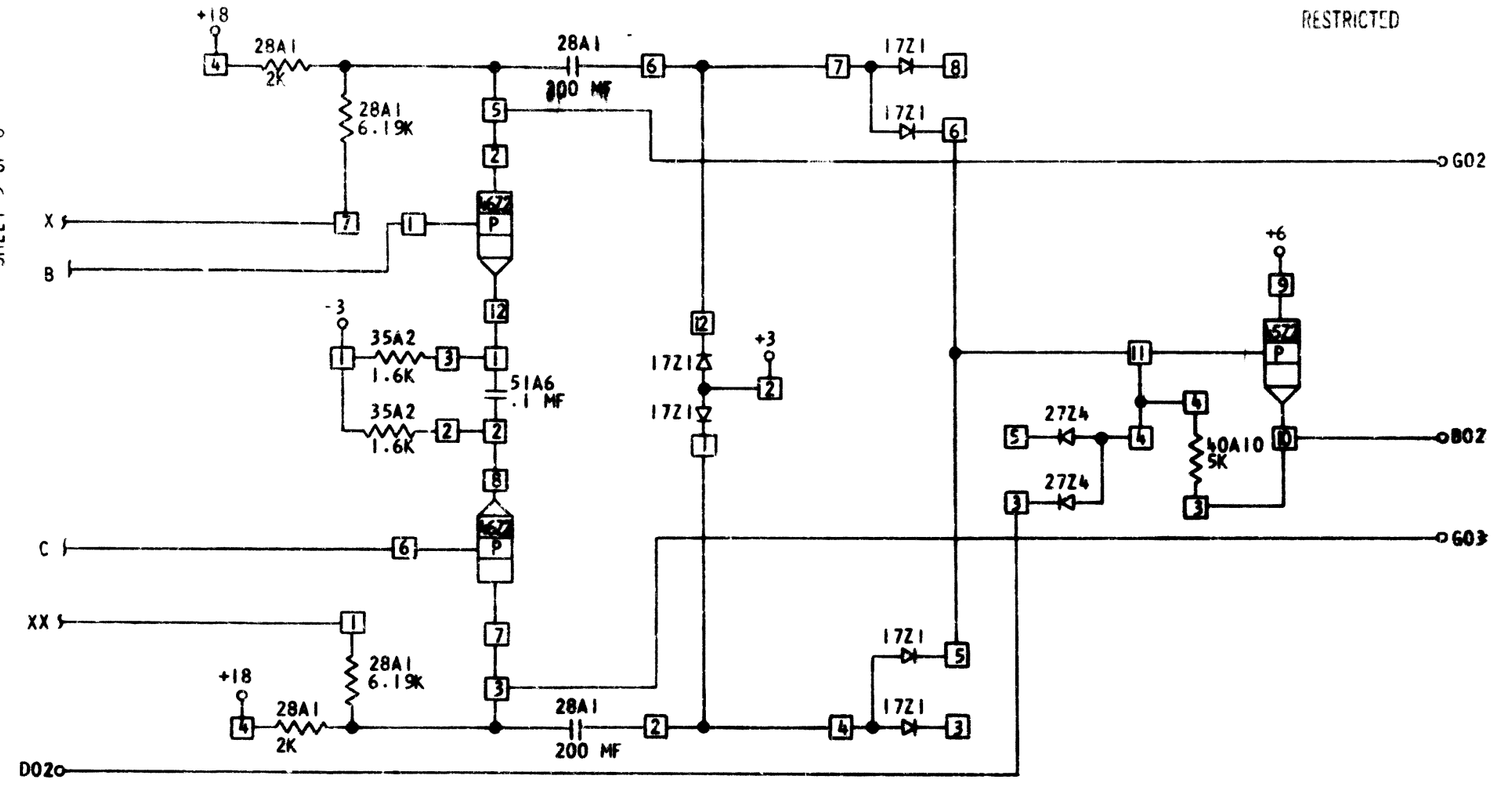

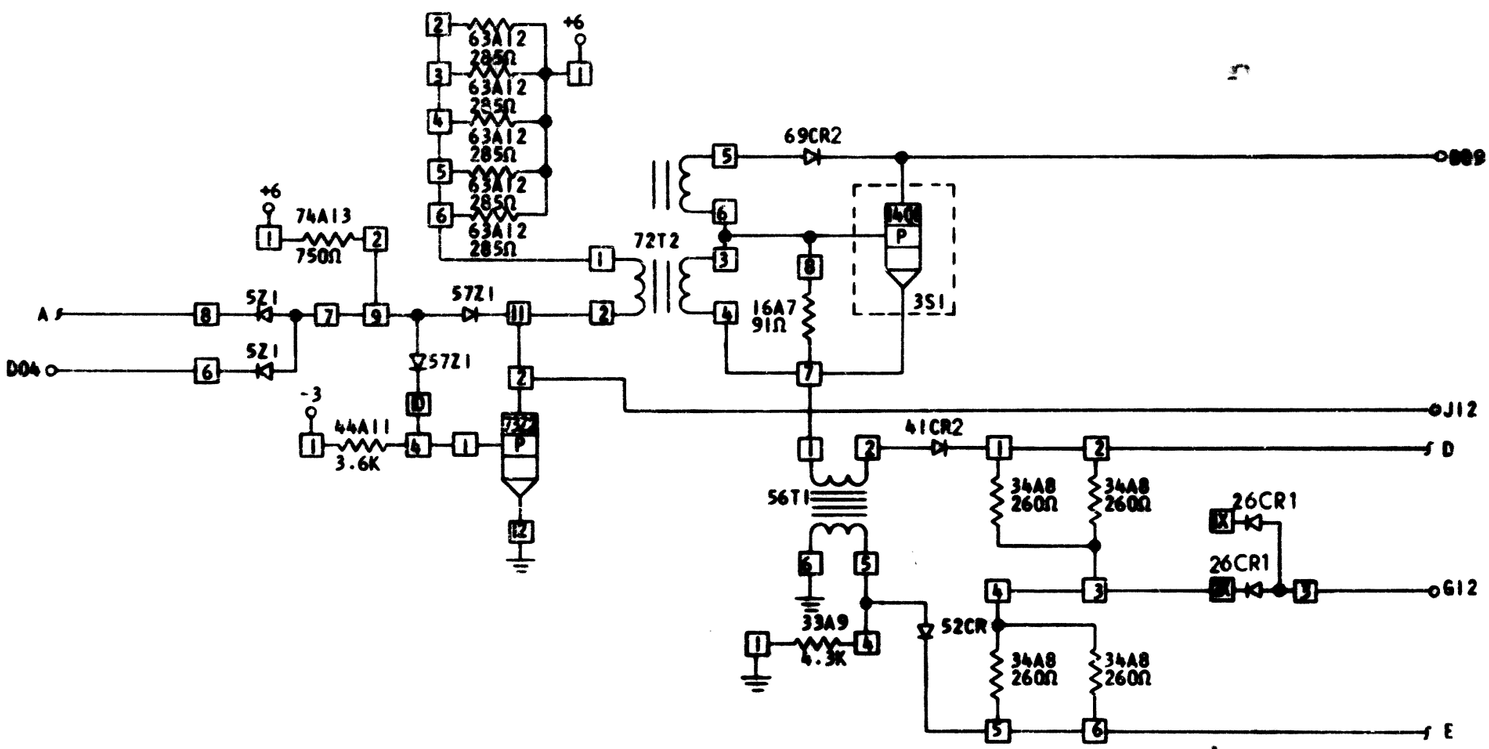

CIRCUIT AND PACKAGING STANDARD	
APPROVAL	DATE

INTERNATIONAL BUSINESS MACHINES CORP.	DATE	CHANGE NO.	APPROVAL	DATE	CHANGE NO.	APPROVAL	DEVELOPMENT NO.
NAME 1401 SA + TWENTY	9-4-64	DEV 3582		8MAR67	166541 E		
DRAWN RLT 7/21/64 MODEL	10-15-64	161014 A					
DETAIL RLT 7/21/64 SCALE NONE	1-18-65	162352 B					
CHECK WJT 7-24-64 DRAW VMC 8/11/64	3-2-65	163601 C					
APPRO CHECK	18-AUG-65	165540 D					

5804839

C