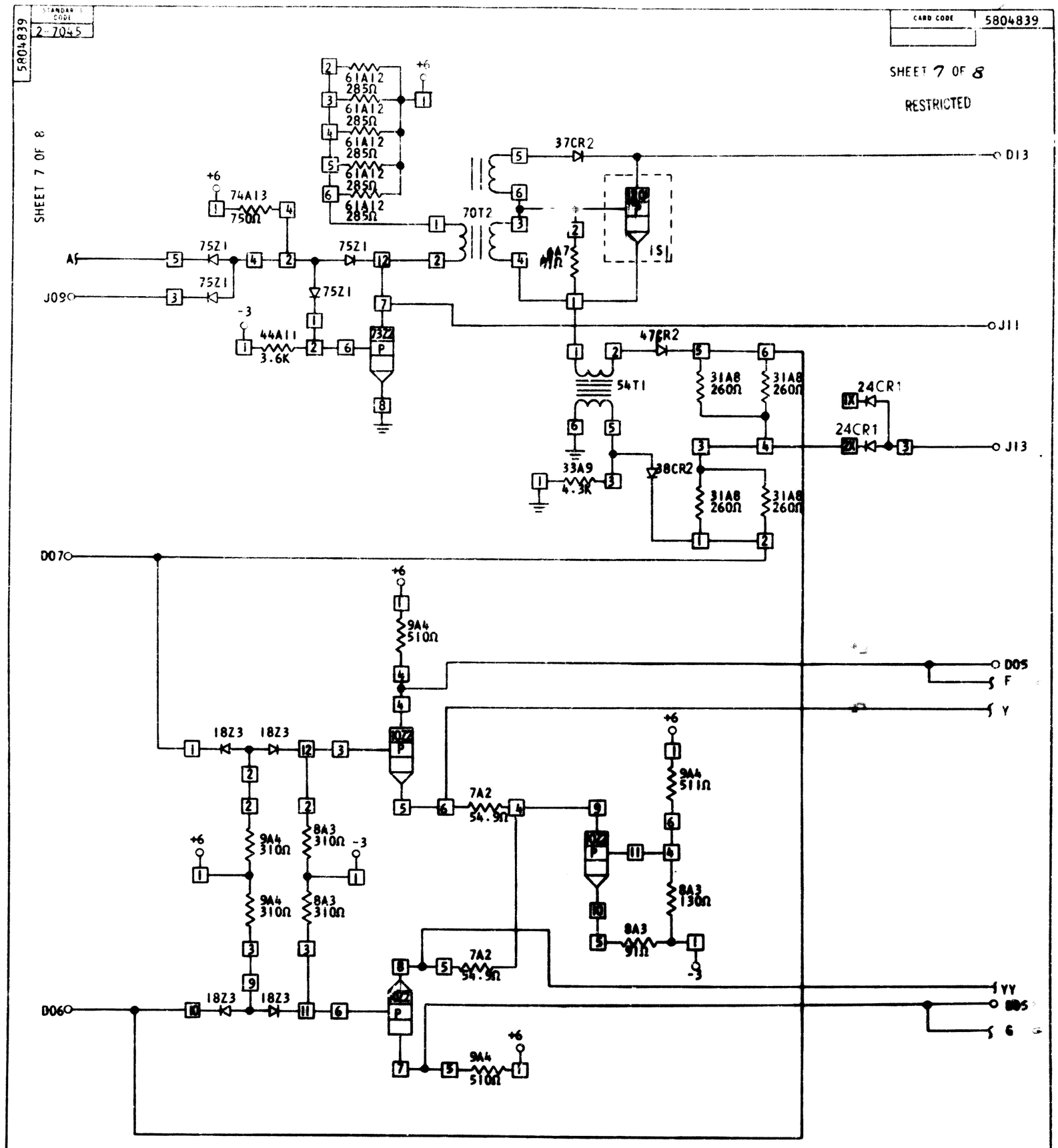

CIRCUIT AND PACKAGING STANDARD	
APPROVAL	DATE

INTERNATIONAL BUSINESS MACHINES CORP.				DATE	CHANGE NO.	APPROVAL	DATE	CHANGE NO.	APPROVAL	DEVELOPMENT NO.
NAME	M2 SA + INHIBIT			9-4-64	DEV 3582		8MAR67	166541 E		
DESIGN	RJS 7-21-64	MODEL		10-15-64	161014					
DETAIL	RLL 7-21-64	SCALE	NONE	1-18-65	162352 B					
CHECK	WJ 7-24-64	DRAW	VMORRIS 7/64	3-2-65	163601 C					
APPRO		CHECK		16-AUG-65	165540 D					

5804839

C